SiD
A Silicon Detector for the ILC

Semiconductor Detectors

The Art of the Experiment
Dave Nygren Symposium

Martin Breidenbach

With thanks to my SiD and ILC colleagues

The ILC will have two detectors… The other one will feature a TPC.

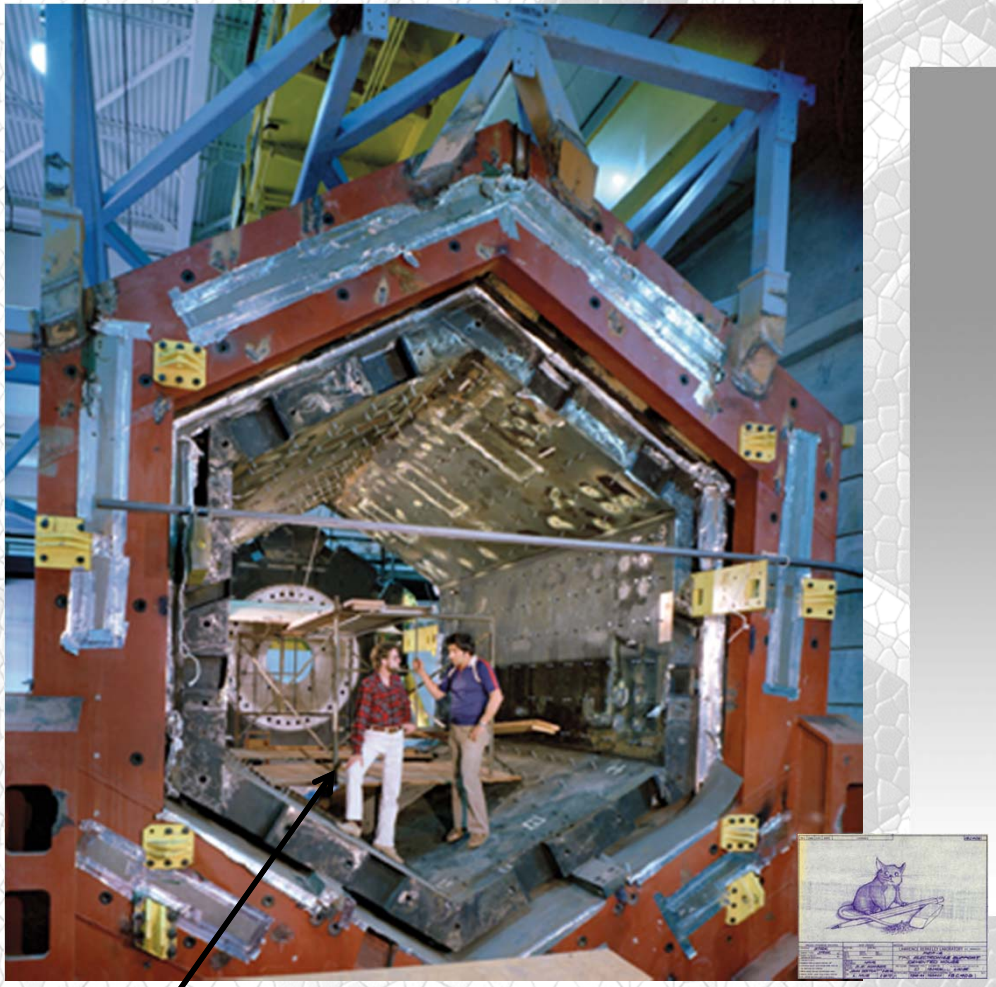

Dave – at PEP IR 4 where the first TPC will go

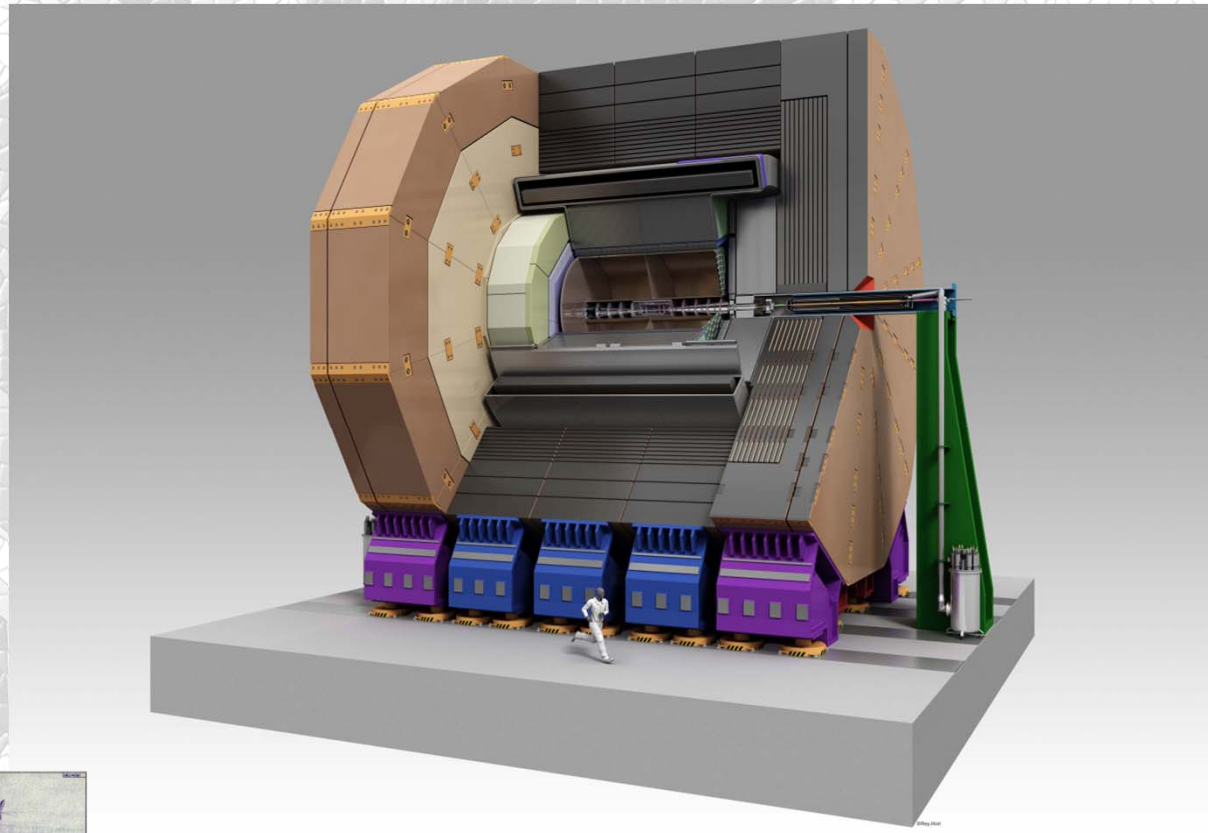

ILD - where the next big TPC will go. Note scale!

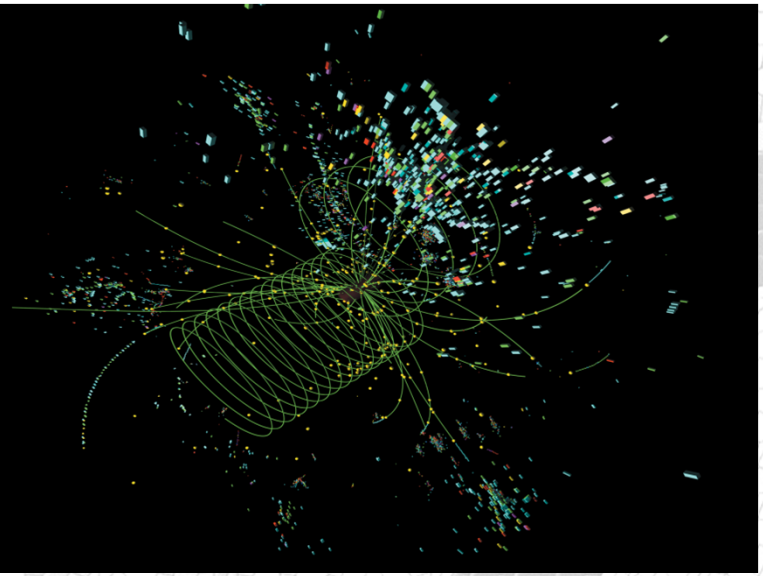

The Physics Opportunities

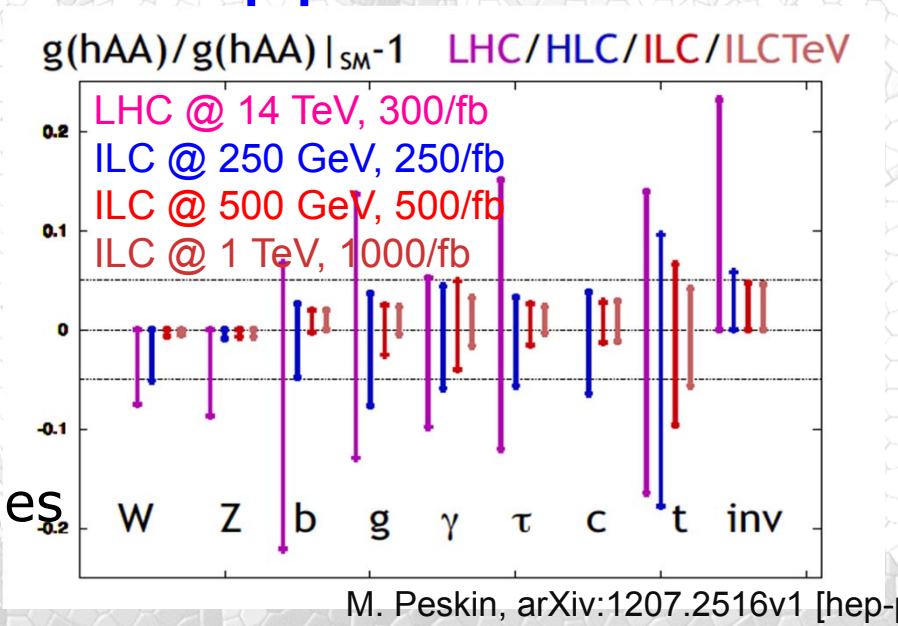

M. Peskin, arXiv:1207.2516v1 [hep-ph]

- The ILC machine offers unique advantages
  - Clean environment
  - Well defined initial states
  - Possibility to do threshold scans
  - Beam Polarization
  - No Triggering! See everything

- This allows
  - Precise studies of the Higgs & Top – study all Higgs decays by tagging recoil Z
  - High precision, model independent measurements of all B.R.'s
  - Access to all Higgs decays – coupling to DM??
  - Access to states hidden in LHC backgrounds: DM, LSP

The ILC machine

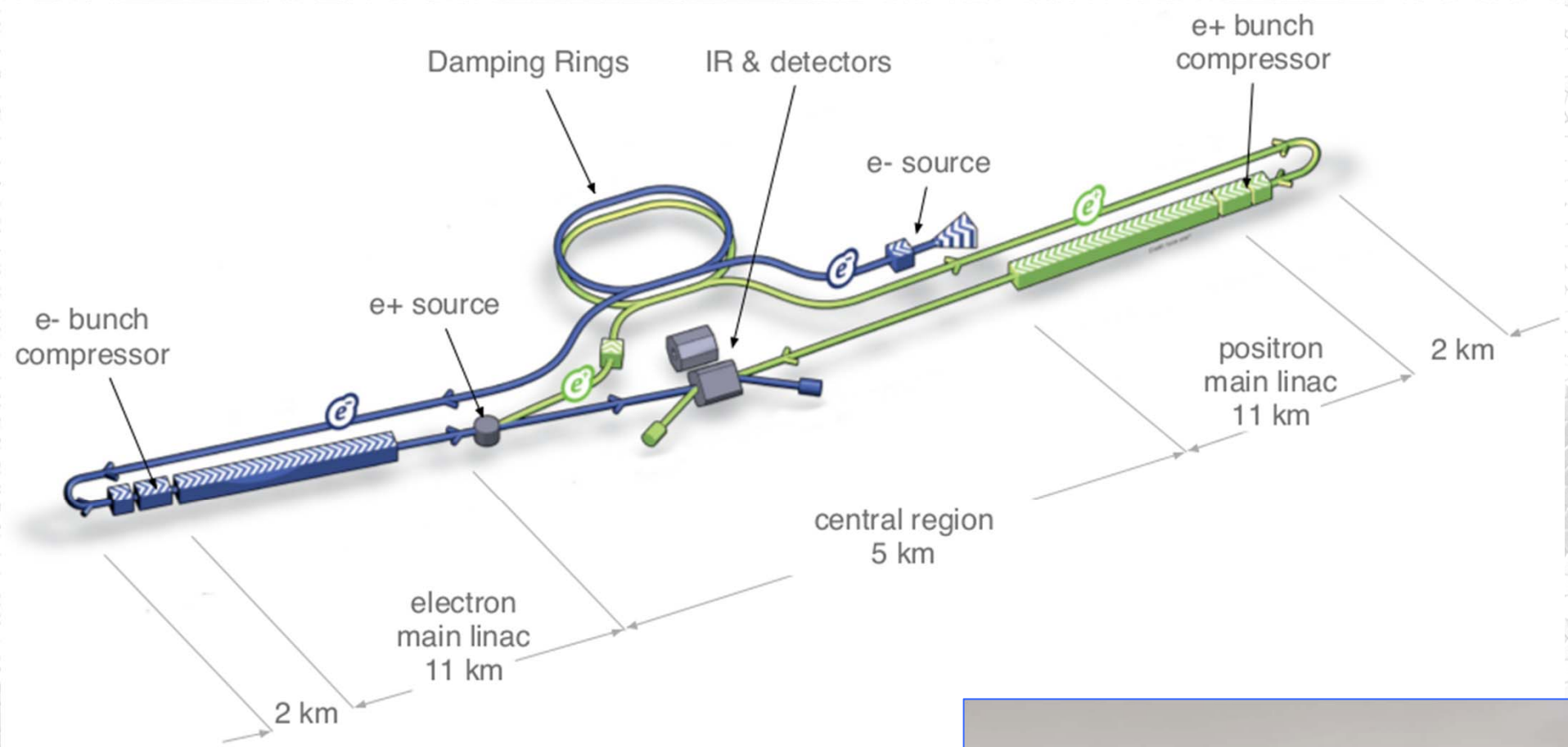

- Total length ~ 31 km
- Energy range
  - Baseline Design 250-500 GeV
  - Upgrade for 1 TeV

Japan is proceeding….

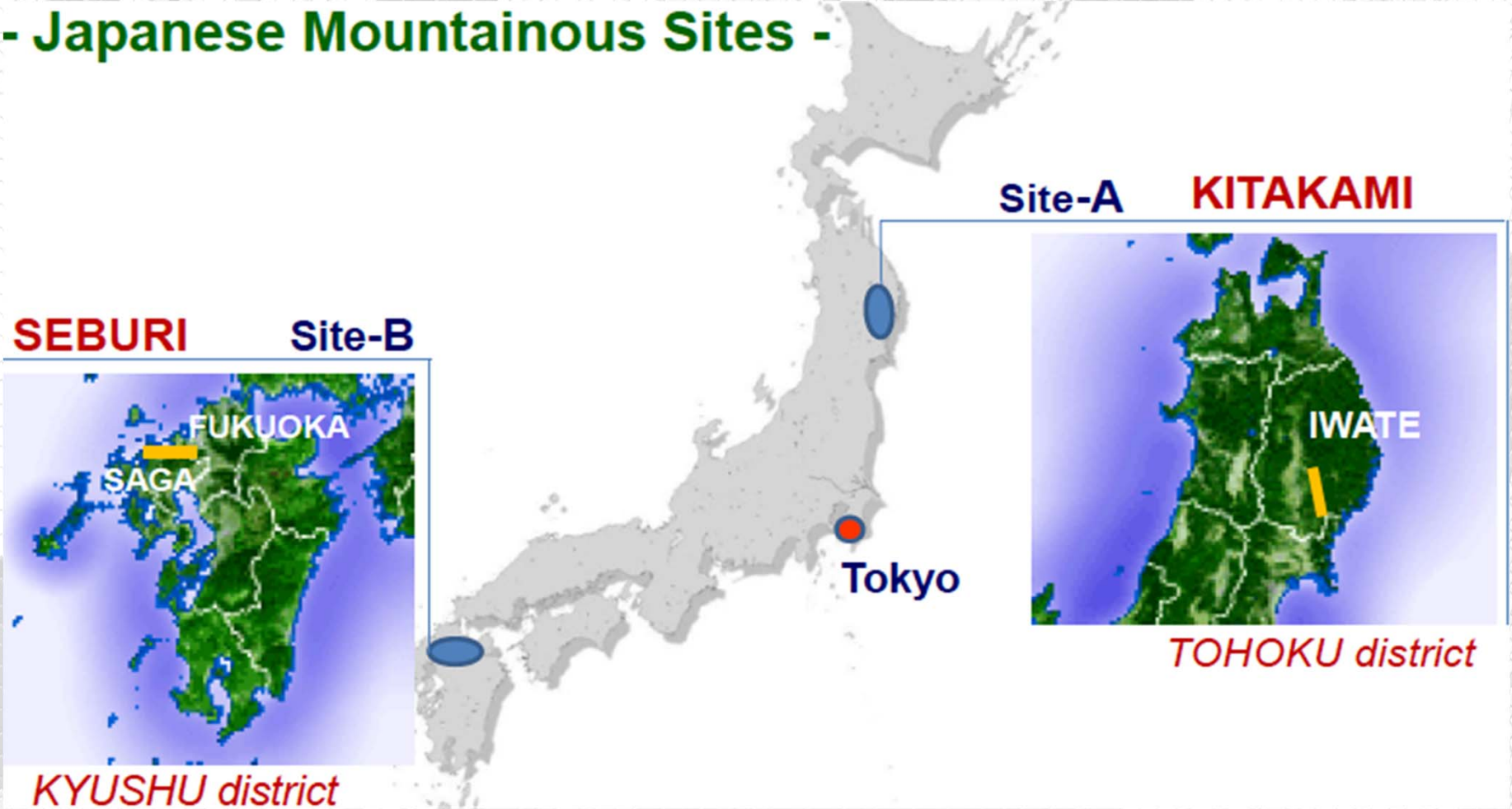

ILC Environment

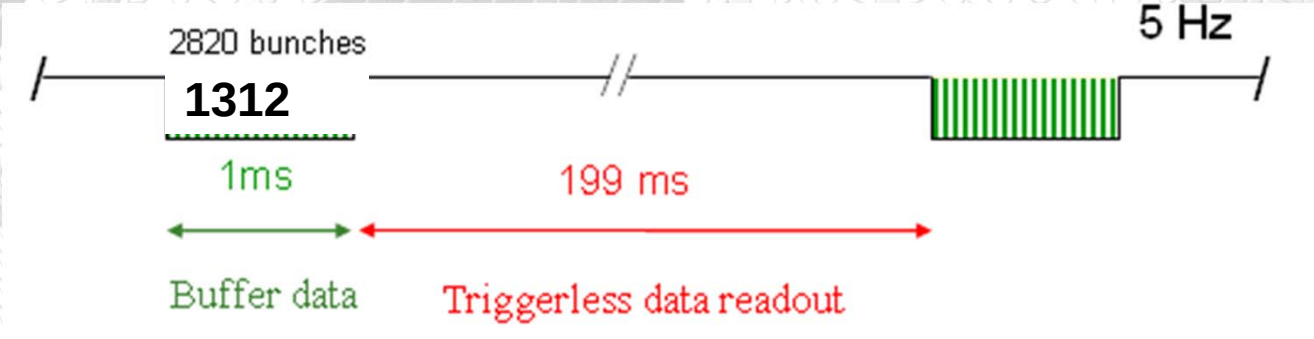

- ILC environment is very different compared to LHC
  - Bunch spacing of ~ 554 ns (baseline)
  - 1312 bunches in 1ms
  - 199 ms quiet time
- Occupancy dominated by beam background & noise
  - ~ 1 hadronic Z per train ...
- ~negligible radiation challenge except very forward

New opportunities for silicon sensors with integrated readout (System on a chip) – ~No rate, ~no radiation, and ~no power!

- Readout during quiet time possible
- No Triggers, no pile-up ...

SiD and ILD will share a final focus

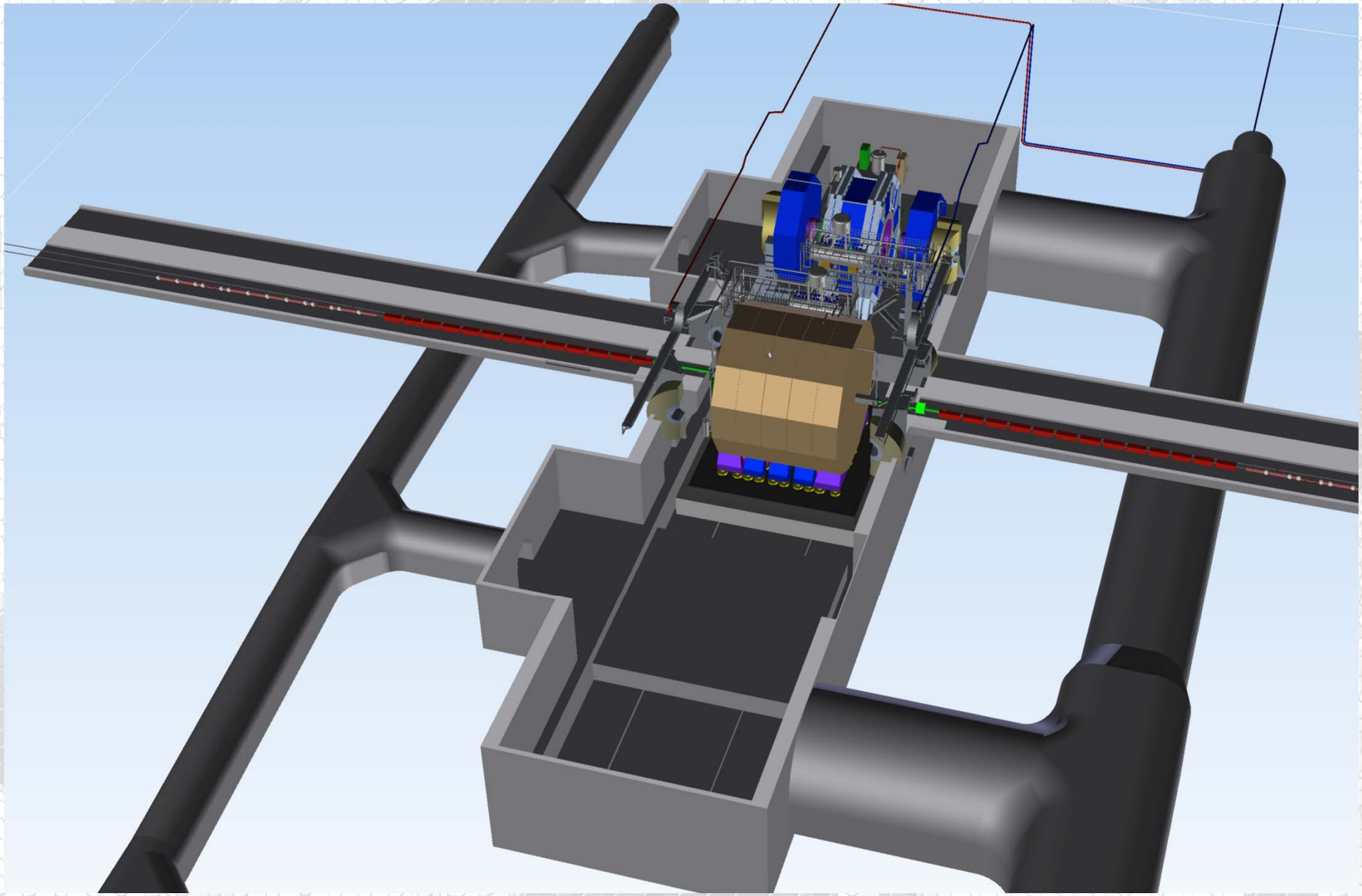

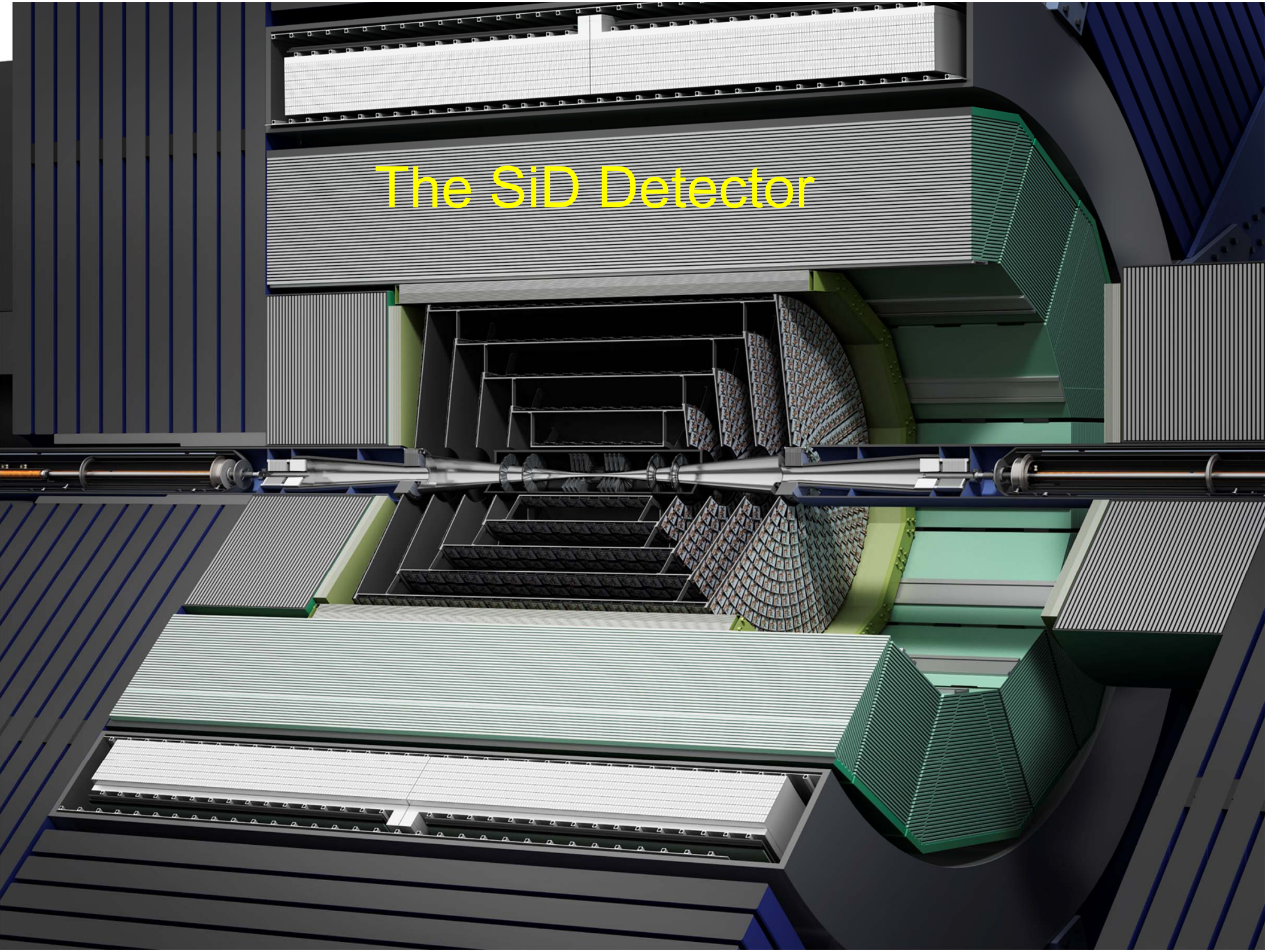
The SiD Detector

Challenges for Physics and Instrumentation

Physics	Detector
Unambiguous identification of multi-jet decays of Z's, W's, top, H's, SUSY's, ZHH	Demands unprecedented jet energy resolution $\sigma_{E_{jet}}/E_{jet} = 3\%$
Higgs recoil mass and SUSY decay endpoint measurements $ZH \rightarrow \ell^+\ell^- X$	Pushes tracker momentum resolution $\sigma(1/p_T) = 5\times10^{-5}\ (GeV^{-1})$
Full flavor identification and quark charge determination for heavy quarks $ZH, H \rightarrow c\bar{c}, b\bar{b}, \ldots$	Demands superb impact parameter resolution $\sigma_{r\phi} \approx \sigma_{rz} \approx 5 \oplus 10/(p\sin^{3/2}\vartheta)$
Full hermeticity to identify and measure missing energy and eliminate SM backgrounds to SUSY $\tilde{\mu}$ decay	Instrumented forward region $\Omega = 4\pi$
The unexpected	

Different challenges

- Calorimeter granularity
  - Need factor ~200 better than LHC
- Pixel size
  - Need factor ~20 smaller than LHC
- Material budget, central tracking
  - Need factor ~10 less than LHC
- Material budget, forward tracking
  - Need factor ~ >100 less than LHC

Requirements for Timing, Data rate and Radiation hardness are very modest compared to LHC

Vertex Detector

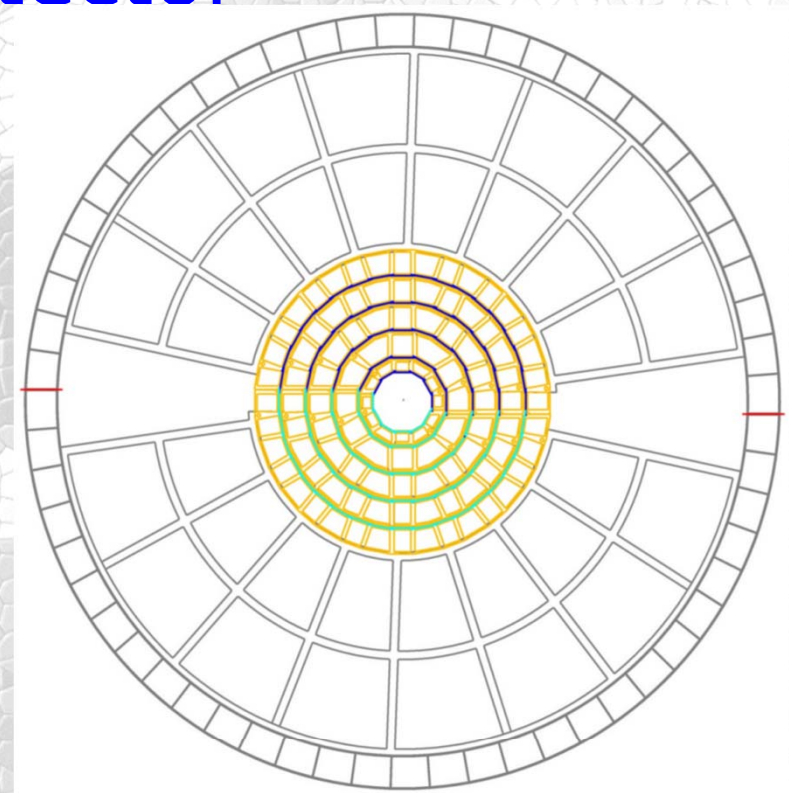

- Many potential technology choices
  - No baseline selected yet
  - Technology not there yet
- Requirements
  - <5 μm hit resolution
  - ~ 0.1 % X_0 per layer
  - Gas cooled, total power ~20 W.
  - Single bunch timing resolution
- Insertion of Vertex Detector straightforward
  - Change and late technology choice possible

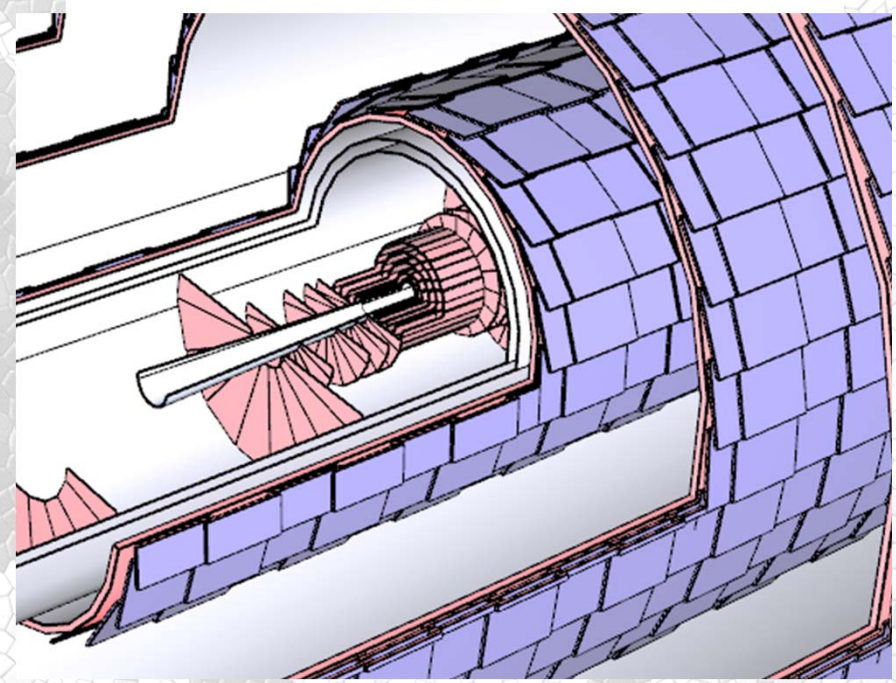

Barrel and Disk Configuration:

- Uniform angular coverage and response

Chronopixel

Chronopixel is a monolithic CMOS sensor with single bunch-crossing time stamping

Each pixel contains sensor, signal detection circuit – comparator, offset calibration circuit, and two 12 bits memory cells to record time stamps of 1 or 2 hits occurring during bunch train.

Readout is performed in time intervals between bunch trains. To speed-up readout, each chronopixel chip contains logic allowing skipping of pixels without hits.

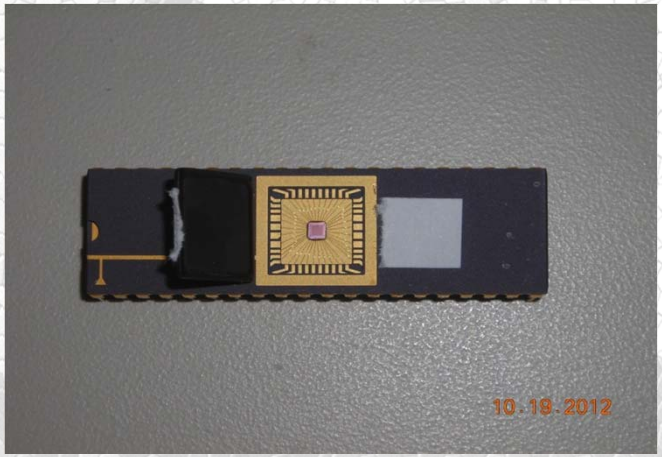

Current design

- 25 x 25 μm^2 pixels (90 nm technology)

Tests show that general concept works

- Good sensitivity (mV/e^-) as designed
- Sensors timestamp max. recording speed (7.27 MHz) is adequate
- Noise figure meets specifications

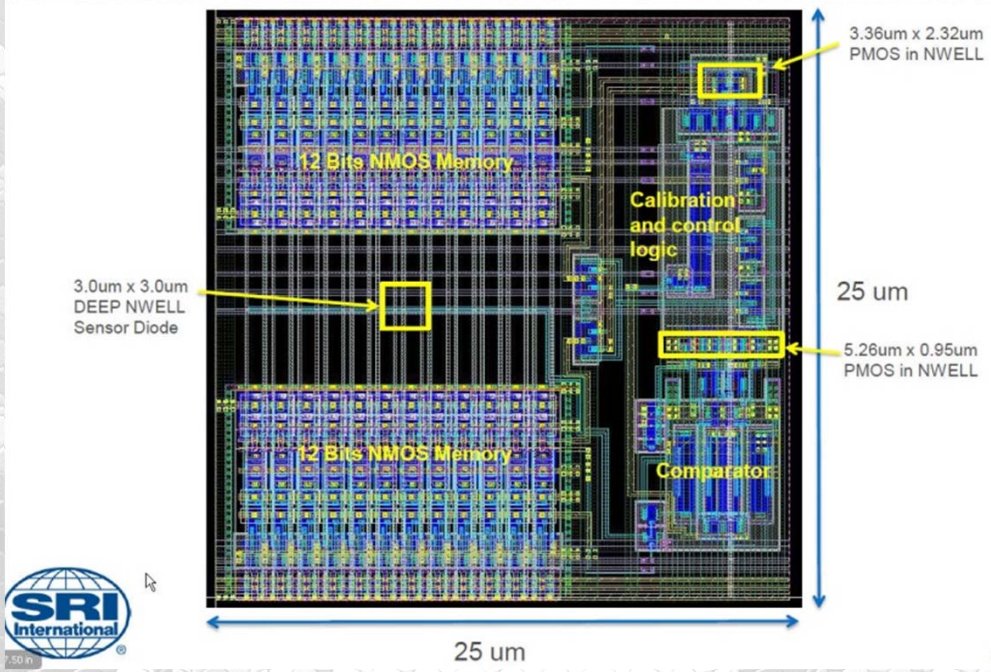

Vertical Integrated Circuits – 3D

Vertical integration of thinned and bonded silicon tiers with vertical interconnects between the IC layers

Technology driven by industry; offers potential for transformational new detectors

Conventional MAPS

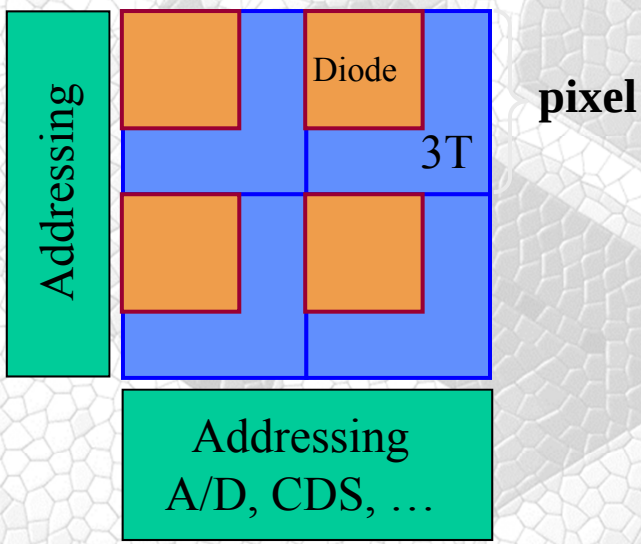

3-D Pixel

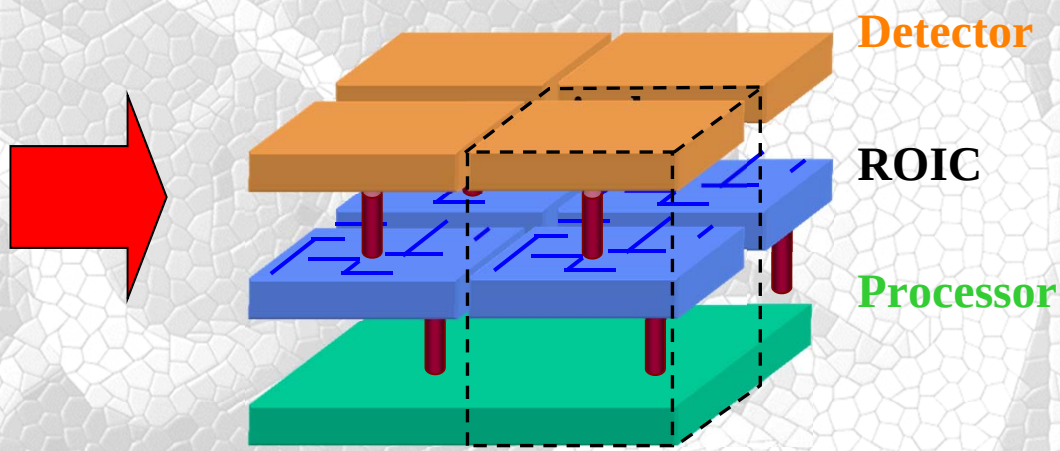

VIP Chip

Fermilab designed Vertical Integrated Pixel (VIP) chip for ILC pixel detector, through MIT-LL process

First chip was functional and a redesign was submitted VIP-2A, MIT-LL

- Pixel array 48x48, 28x28 μm^2 pixels; design for 1000 x 1000 array
- Provides analog and binary readout information
- 7-bit Time stamping of pixel hit
- Token passing readout scheme
- Sparse readout

Chip divided into 3 tiers

~ 7 μm / tier

Fermilab VIP-I

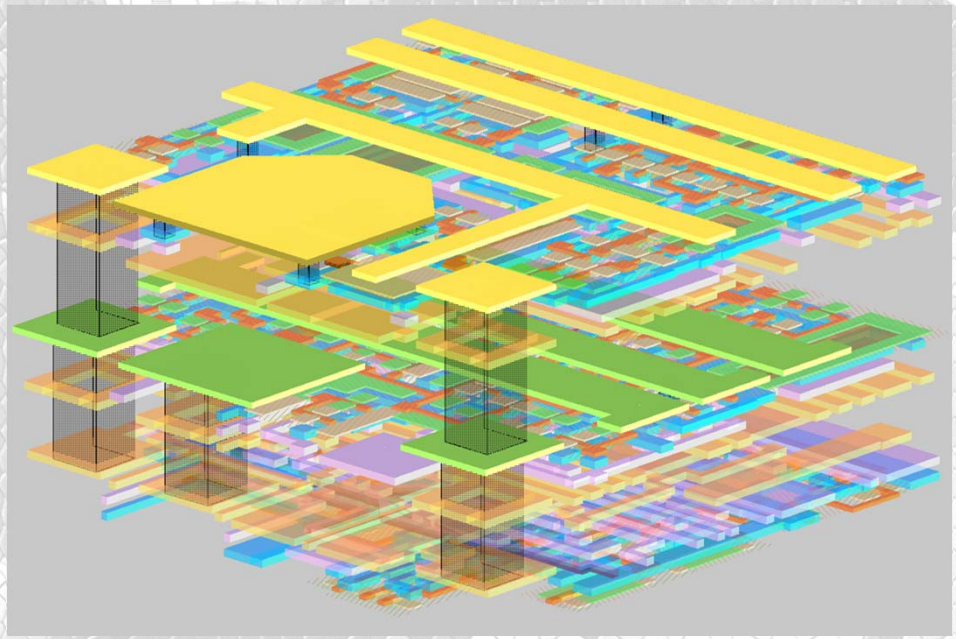

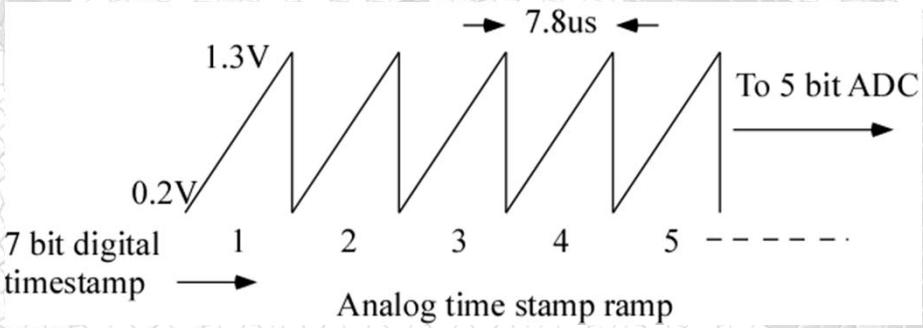

Time jitter and linearity better than 1%
Control over the full range to 1 ms

Picture of first 3D wafer from Fermilab

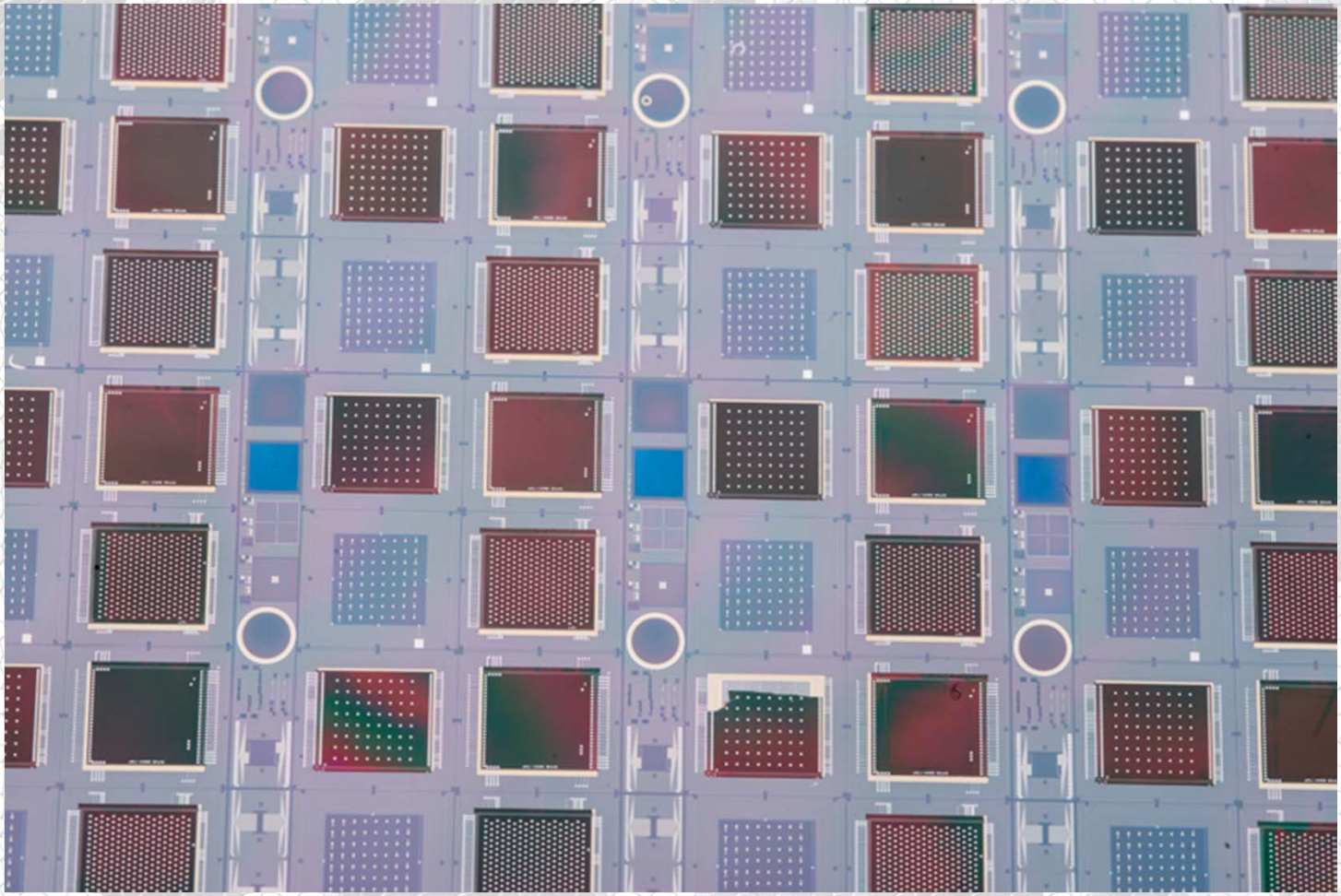

The three distinct chips (patterns) you see are: VIPIC, VIP and VICTR chips
VIPIC = Vertical Integrated Pixel Imaging Chip (for x-ray correlation spectroscopy)
VIP = Vertical Integrated Pixel chip for ILC
VICTR = Vertical Integrated CMS Track Trigger chip
Chips are bonded to a regular silicon sensor; chips have two layers, DBI bonded

Silicon Strip Tracker

- All silicon tracker
  - silicon micro-strip sensors 10 x 10 cm
- 5 barrel layers and 4 disks
- Gas Cooled ~400 w total
- Material budget
  - less than 20 % X_0 in the active area
- LHC demonstrated Si works very well. Sims show robust tracking performance with backgrounds..Now preferred for high background environment e.g. CLIC.

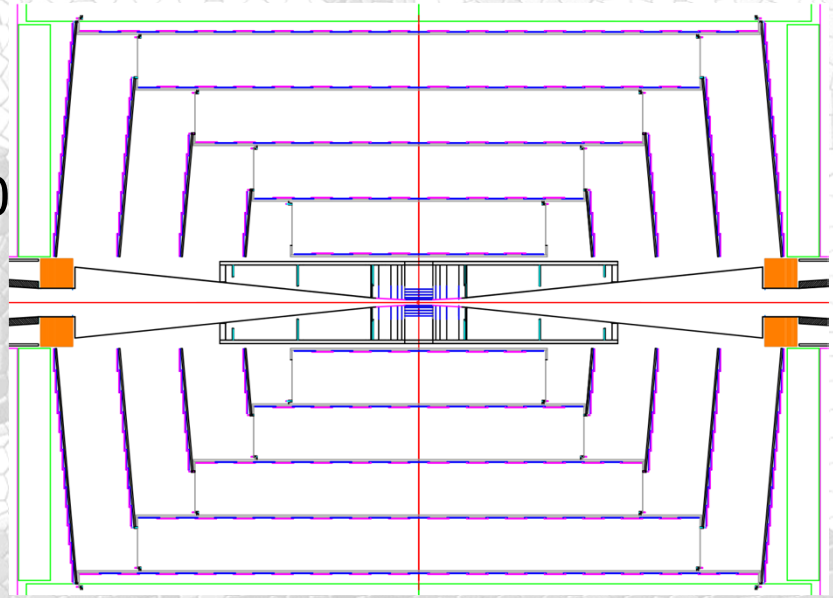

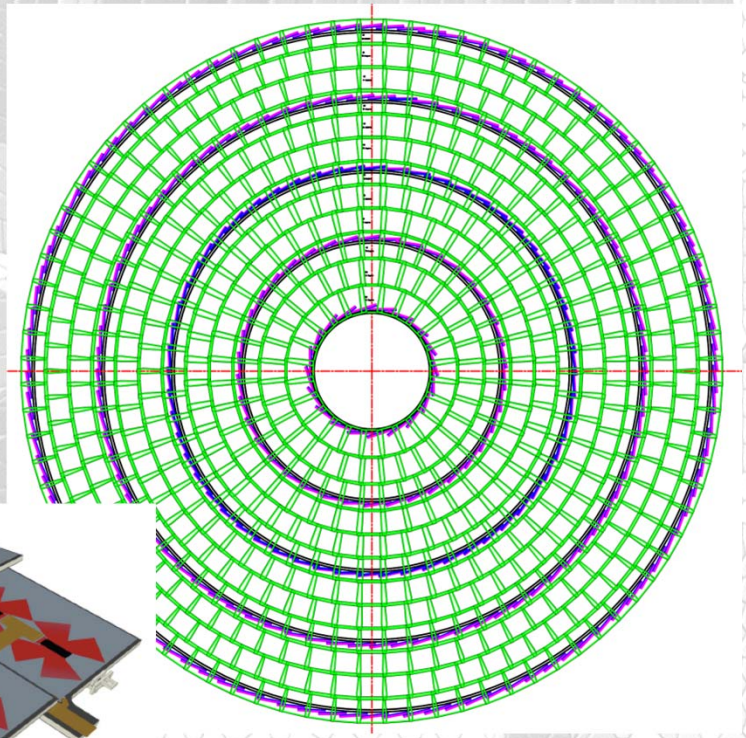

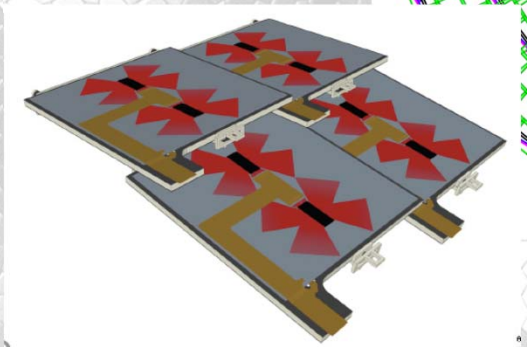

Tracker Module

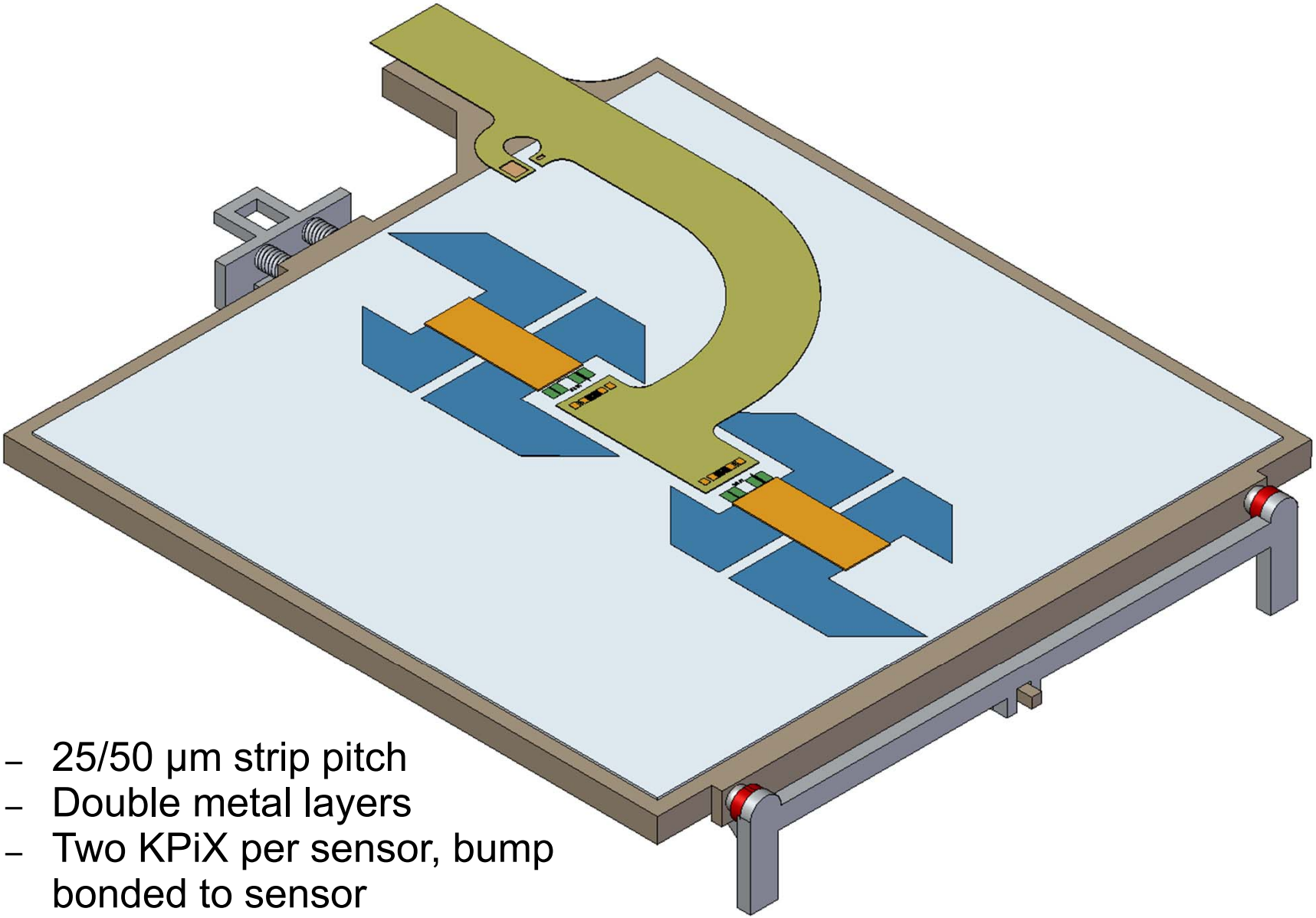

- 25/50 μm strip pitch
- Double metal layers
- Two KPiX per sensor, bump bonded to sensor
- Cable bump bonded to sensor, short traces on sensor to KPiX
- Hybrid-less design

KPiX – a readout system on a chip

- A 1024 channel system to be bump bonded directly to large Si Sensors – enabling the Si Tracker and EMCal.
- Optimized for the ILC, with multi-hit recording during the train, and digitization and readout during the inter-train gap (199 ms).
- Front-end power down during inter-train gap. Mean power/channel <20 μW.
- Large dynamic range (for calorimetry) by dynamically switching the charge amp feedback cap.
- Pixel level trigger; trigger bunch number recorded.
- 0.15 fC noise floor
- Options for RPC readout

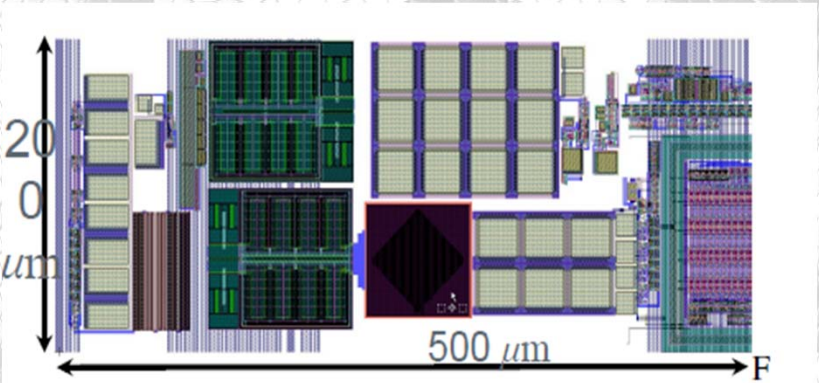

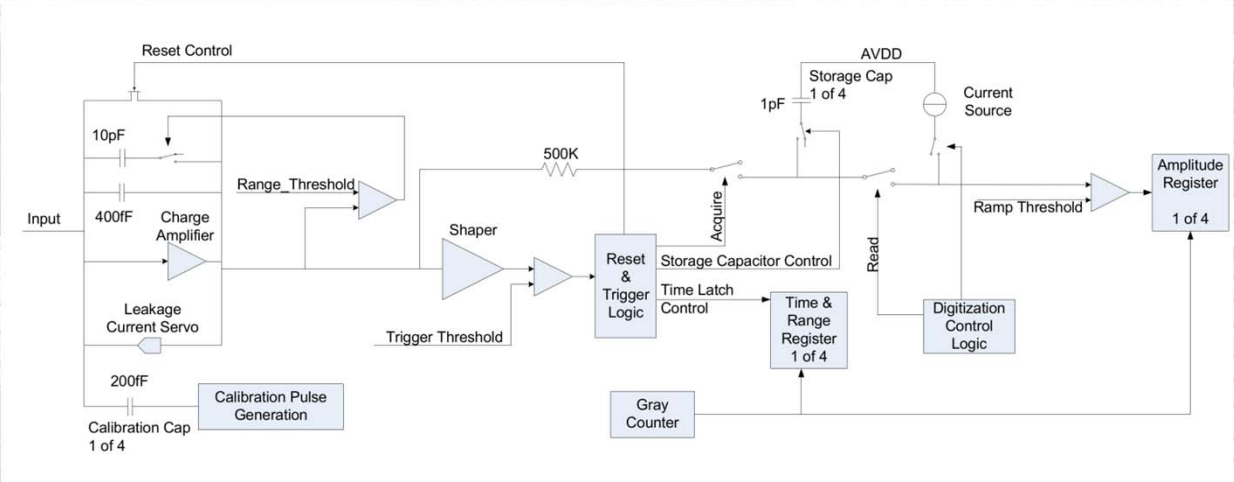

Tracking Performance

- SiD tracking is integrated
  - Vertex and Tracker
  - 10 Hits/track coverage for almost entire polar angle
- Tracking system
  - Achieves desired $\Delta p_T/p_T$ resolution of $1.46 \cdot 10^{-5}$
  - >99 % efficiency over most of the phase space
  - Impact parameter resolution of ~ 2 μm demonstrated in detailed simulation.

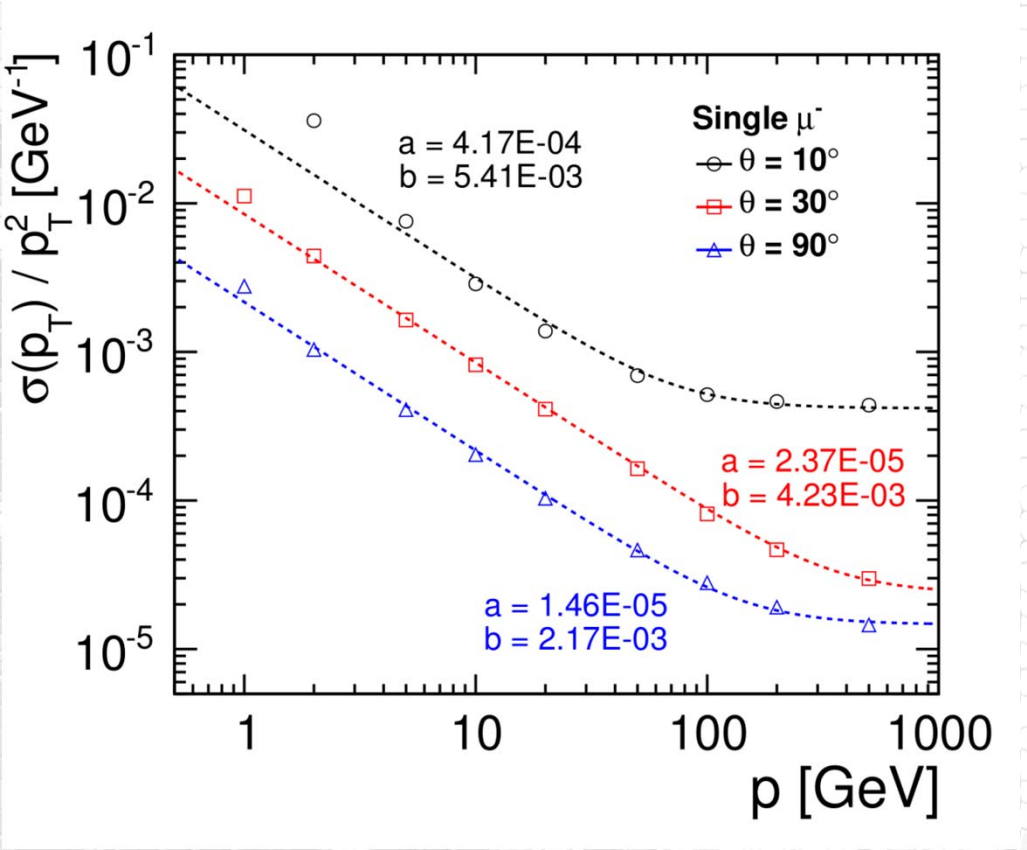

Calorimetry- Optimized for Particle Flow

- SiD ECAL
  - Tungsten absorber
  - 20+10 layers
  - 20 x 0.64 + 10 x 1.30 X_0
- Baseline Readout using
  - 5x5 mm^2 silicon pads
- SiD HCAL
  - Steel Absorber
  - 40 layers
  - 4.5 Λ_i
- Baseline readout
  - 1x1 cm^2 RPCs
- Contender:
  - 3x3 cm scintillator w SiPM's

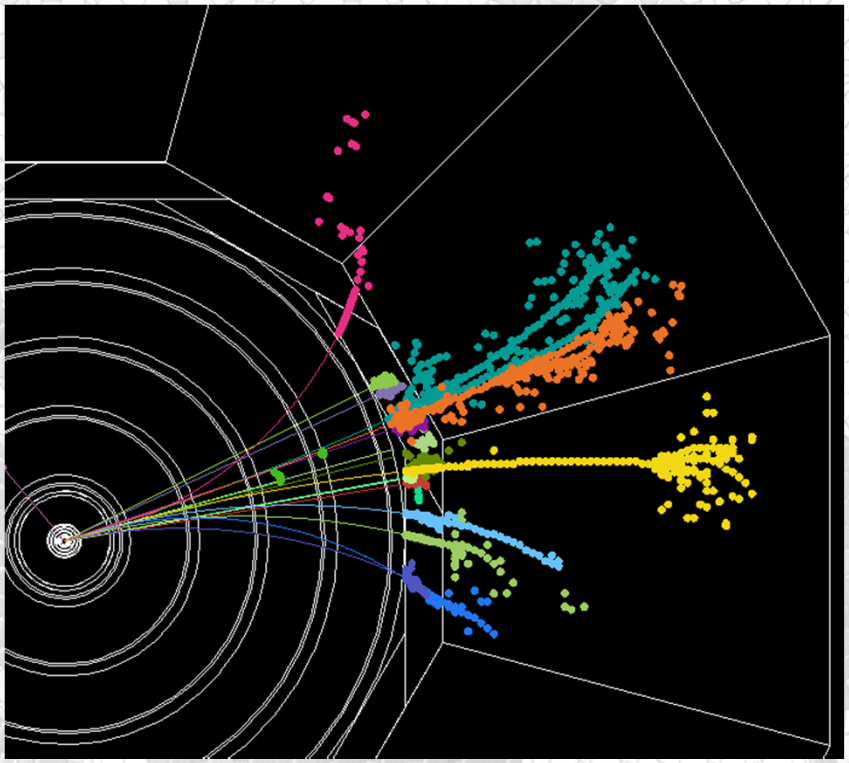

Particle flow significantly improves jets resolution by reducing contribution of hadron calorimeter resolution.

Compact Electromagnetic Calorimeter w 13 mm Moliere Radius

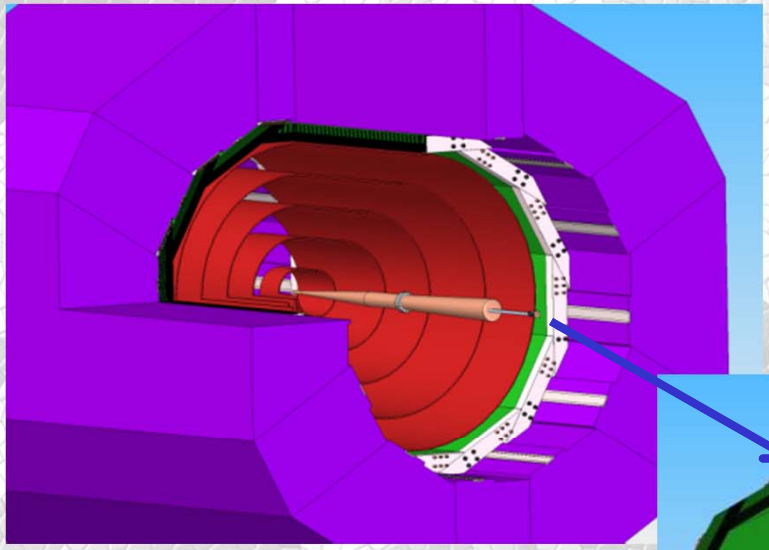

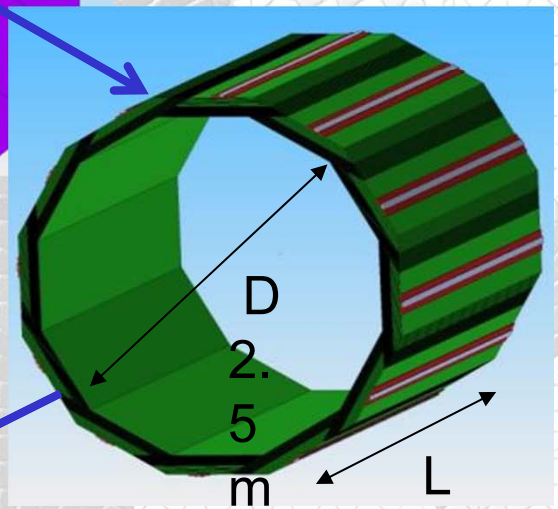

20 layers 2.5 mm W (5/7 X0)
10 layers 5 mm W (10/7 X0)
30 gaps 1.25 mm w Si pixels sensors
29 X_0; 1 λ
$\Delta E/E = 17\%/\sqrt{E}$

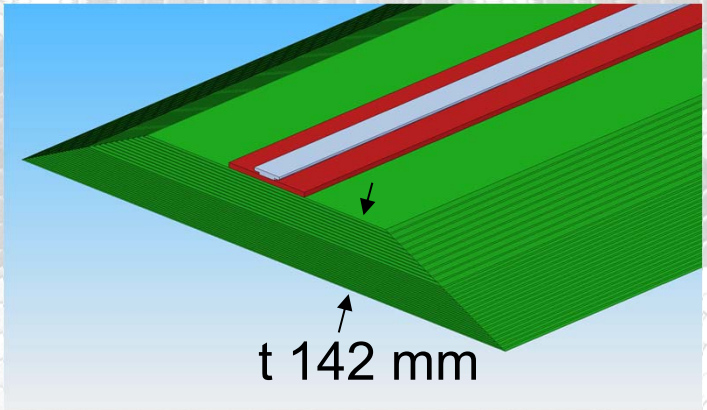

Structure

- One ECAL Si sensor
  - 1024 hexagonal pixel
- KPiX and cable bump-bonded to the sensor
- Analog Readout
  - Deposited charge
- ~1 mm gap: minimize Moliere radius, keep calorimeter compact
- Tungsten plates thermal bridge to cooling on edge

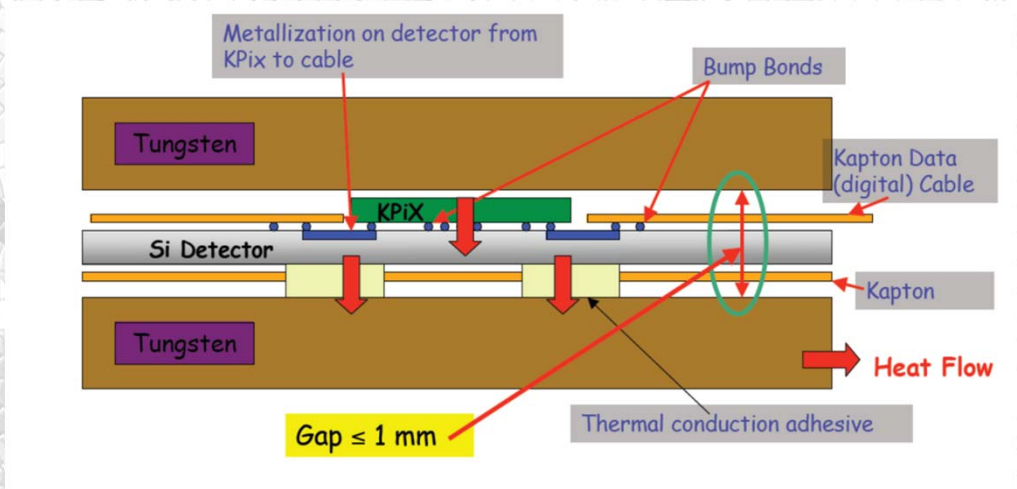

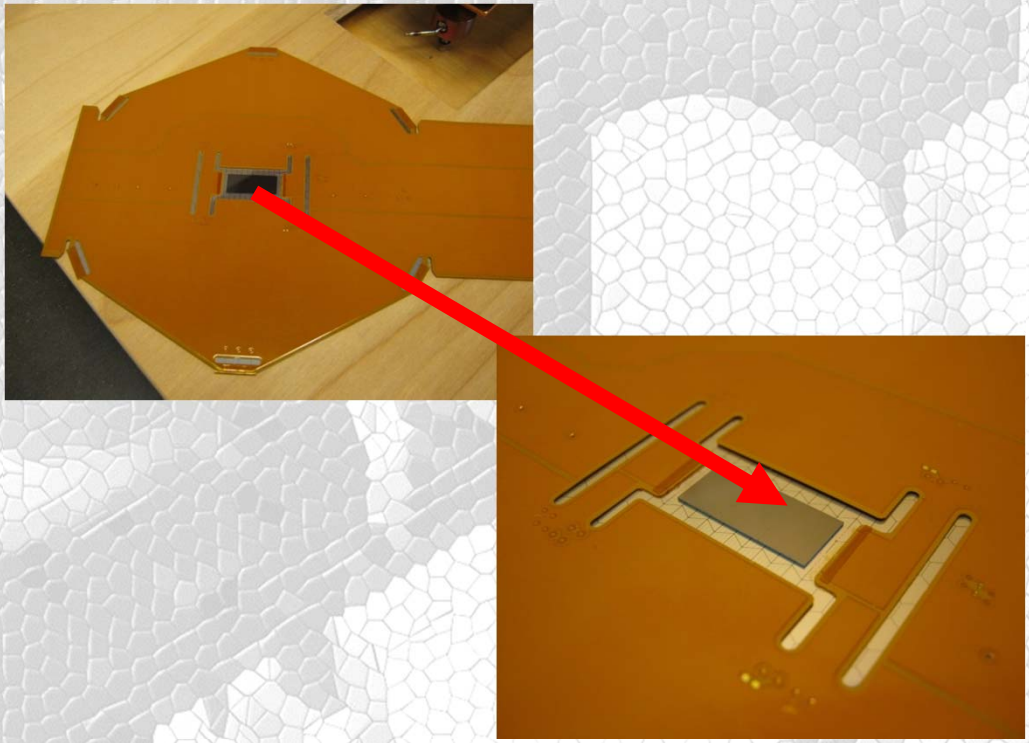

Test beam Ecal prototype design – with SiD longitudinal profile

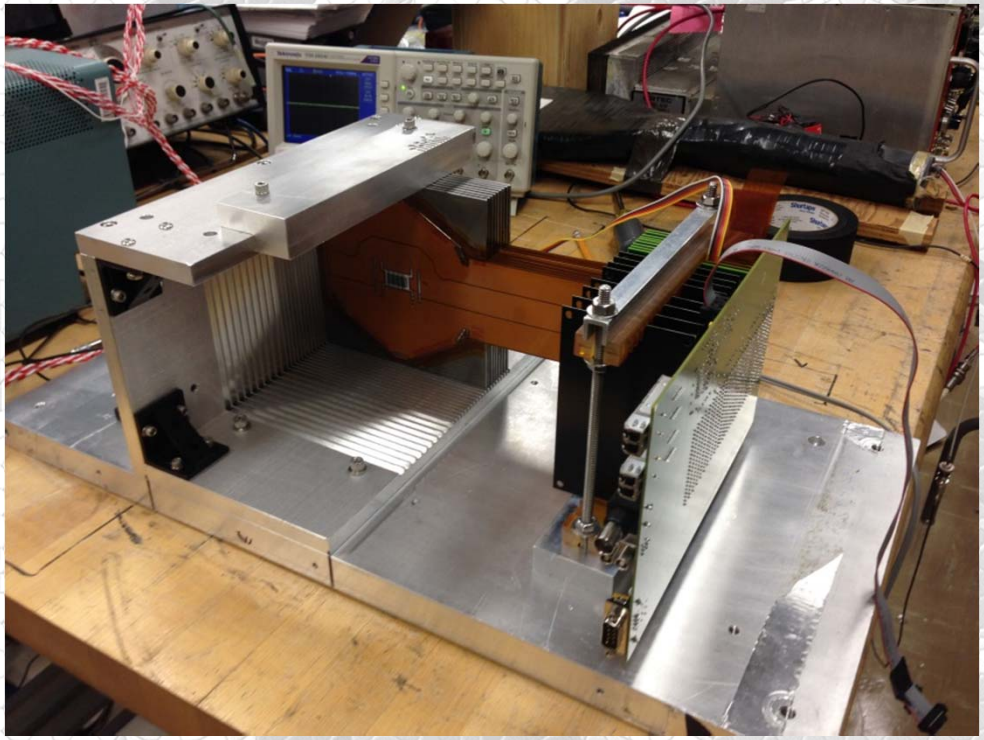

- First system test EMCal sensors in SLAC End Station A beam.
- Utilized (finally!) successfully bump bonded KPiX to sensor and sensor to cable.
- Uncovered issues related to many pixels triggered simultaneously. One part of solution may be on sensor:

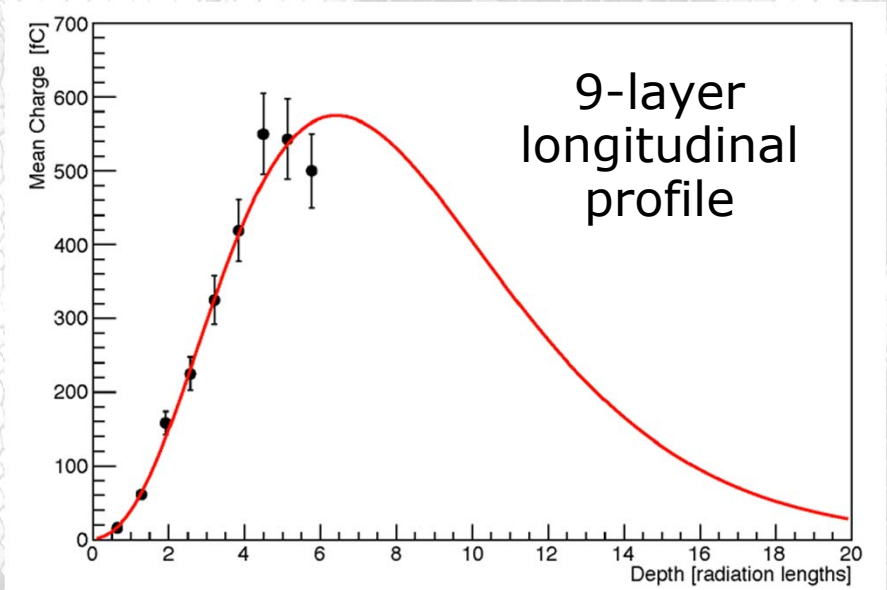

Major Lessons (so far)

- Bump bonding to sensors with Al pads can be very difficult…
  - Consider sensor foundry build final pad stack.
  - Don’t dice the sensors until bonding issues are fully controlled.
- EMCal can have huge number of pixels hit simultaneously, causing synchronous disturbances as pixels reset…
- Sensors with ROC’s can have issues with parasitic couplings…

Sensor Traces

In present design, metal 2 traces from pixels to pad array run over other pixels: parasitic capacitances cause crosstalk.

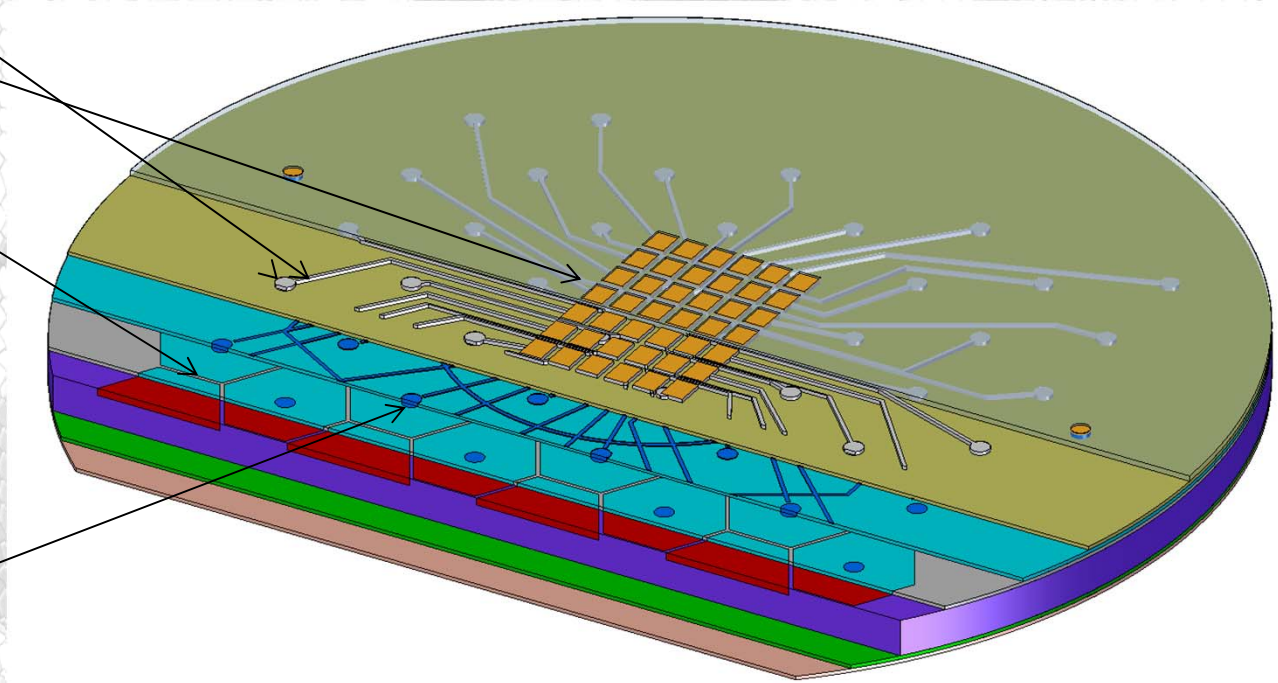

New scheme has “same” metal 2 traces, but a fixed potential metal 1 trace shields the signal traces from the pixels.

- Metal 1

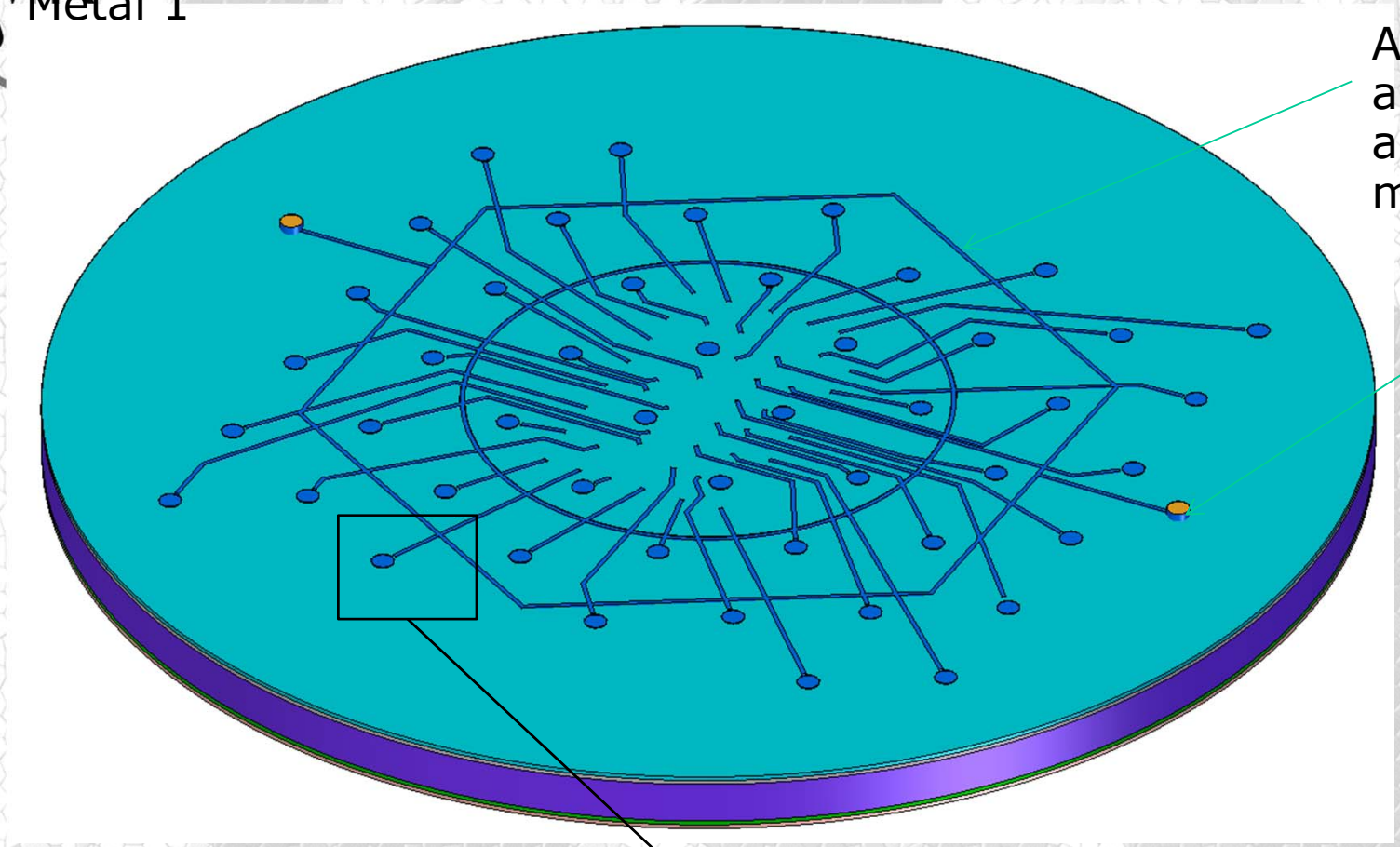

All shield traces are tied together, and brought to a metal 2 pad.

Shield trace running under Metal 2 signal trace.

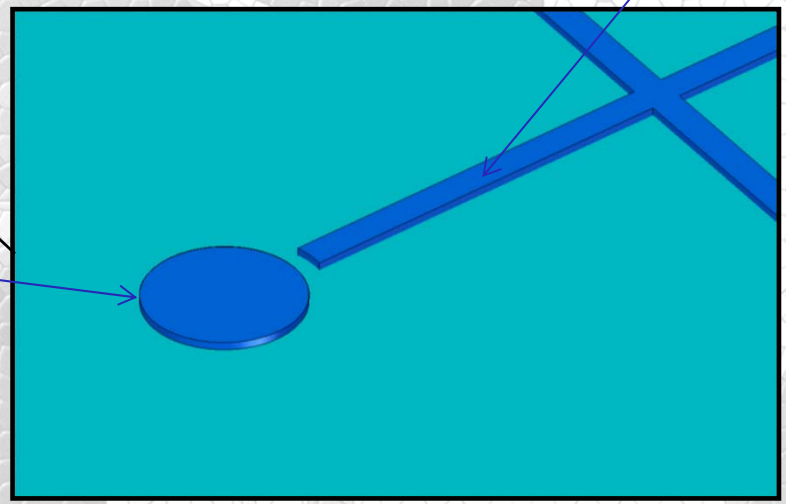

connection of implant to metal 2 trace to pad.

Probably will be tested in next sensor prototype.

Mechanical Progress

ECAL module is built on first layer of HCal

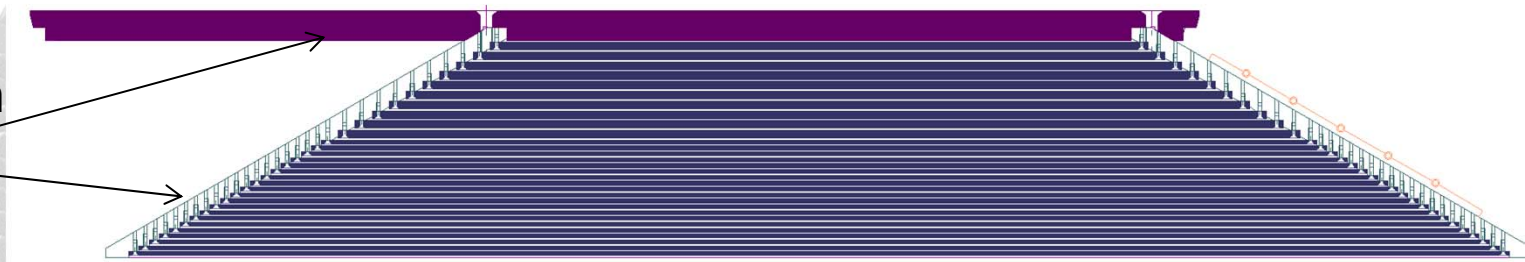

HCAL module supports ECAL module

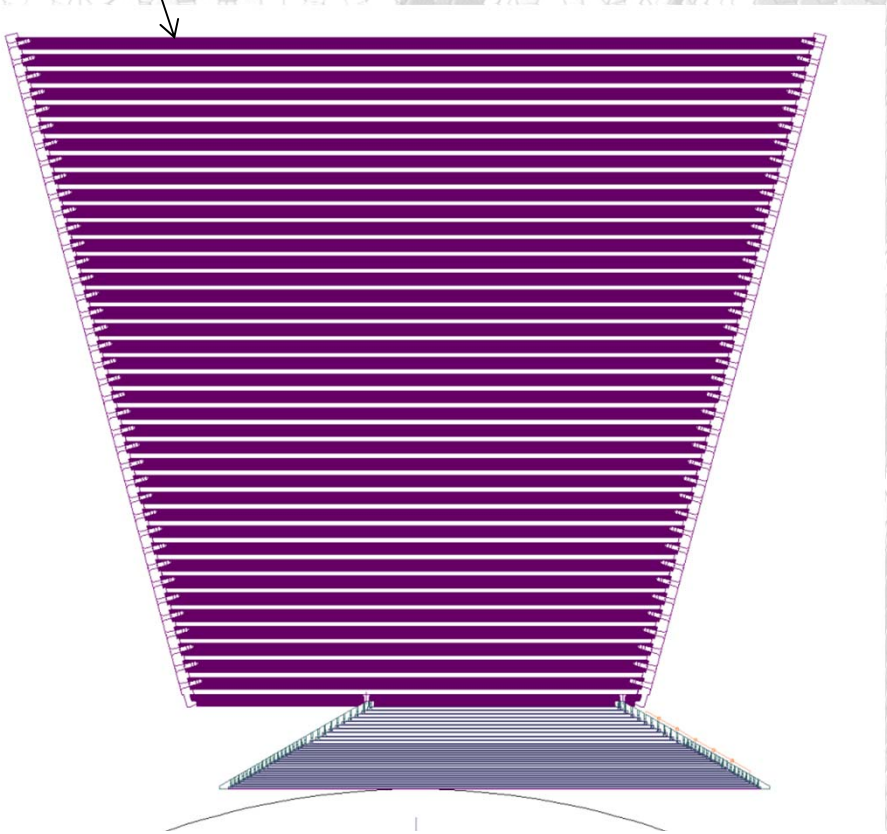

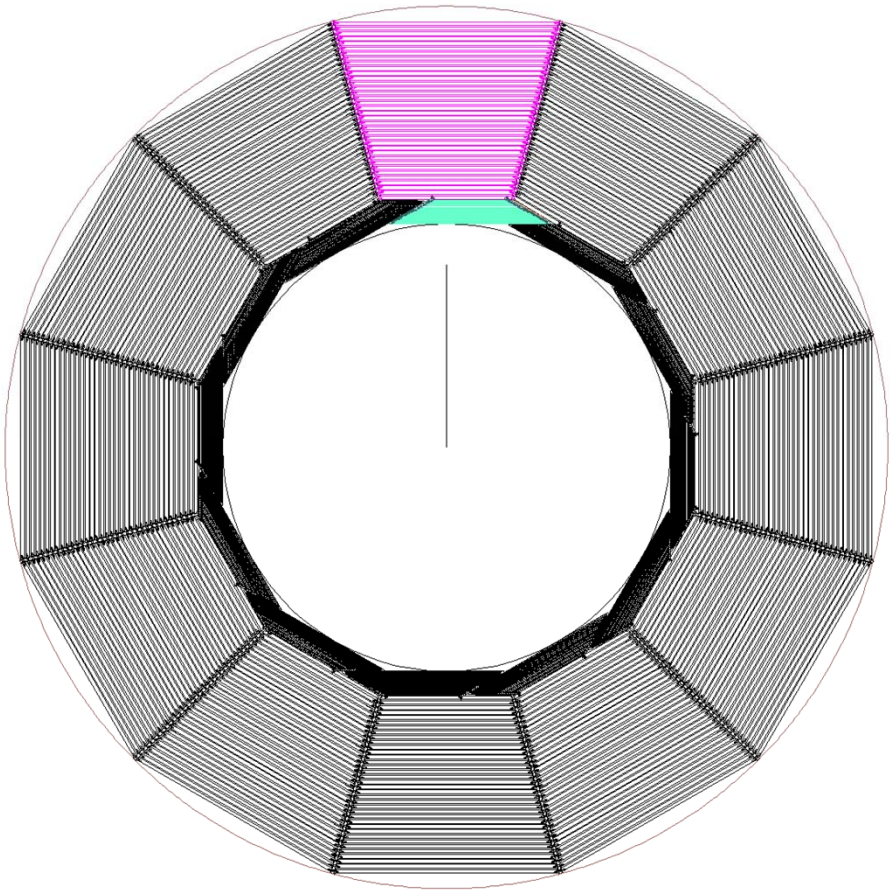

Mechanical implications:

- While hexagons tile large areas more efficiently, edges are painful.
- Two cleverly chosen rectangles can tile to edges and tile endcaps, with simpler cables.
- But ~30% more wafers are needed. Cost implications uncertain, but assuming "per wafer" cost is more conservative.
- Next sensor prototypes will have:
  - Shielded traces
  - Au pads
- Might have:
  - Rectangular shape with square pixels

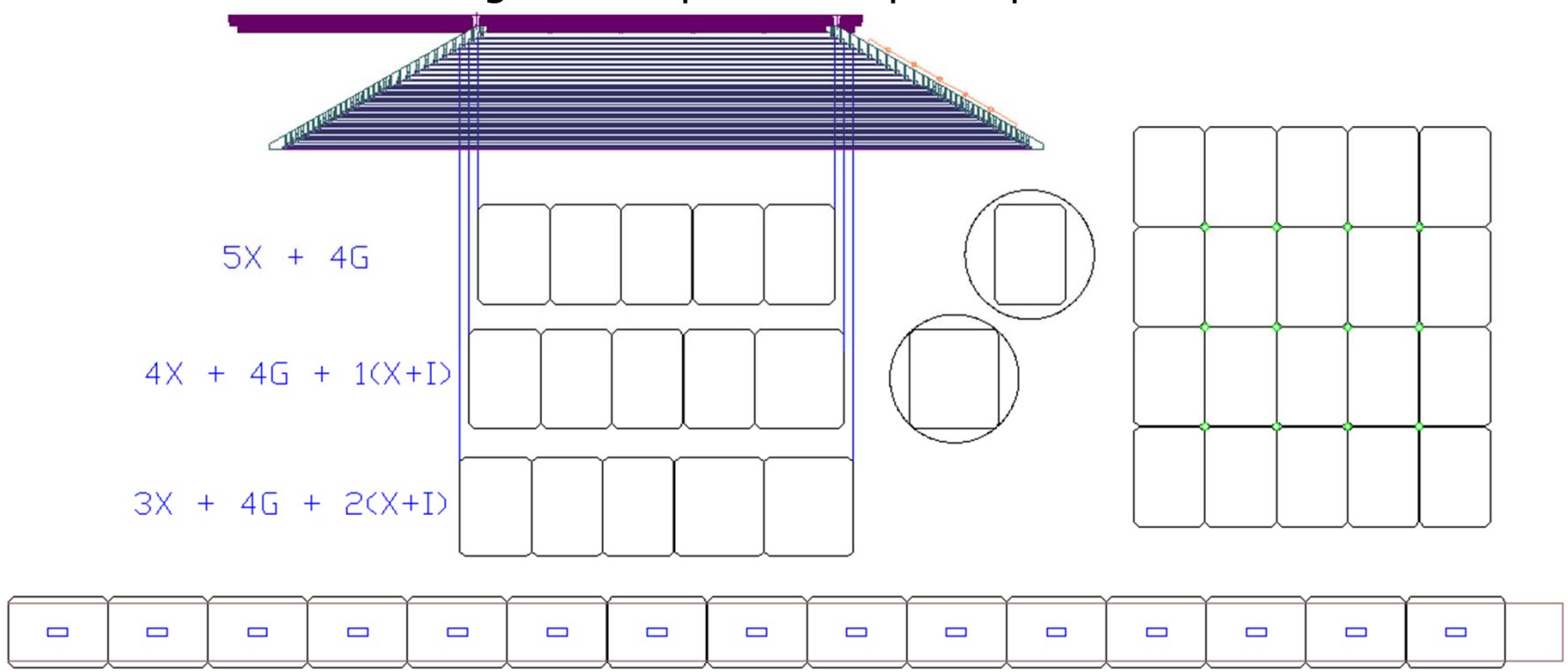

HCAL Baseline

- Digital HCAL
  - Counting shower particles
  - $N_{particles} \sim$ Energy
- Using Glass RPCs
  - 1 x 1 cm^2
- 1 m^3 prototype built
  - 500.000 channels
  - Largest Calorimeter by channel so far

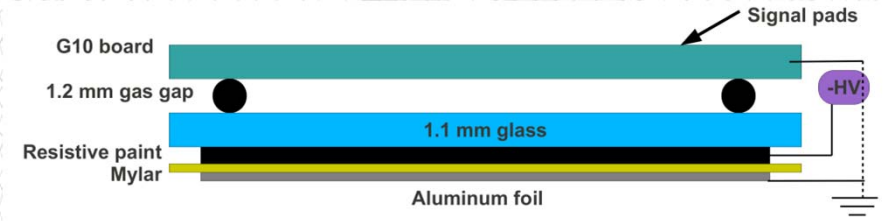

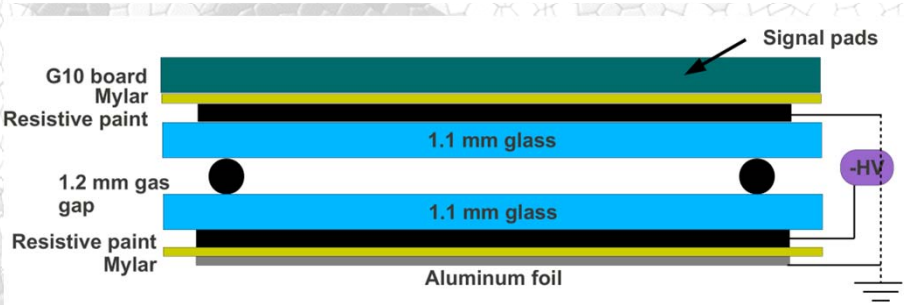

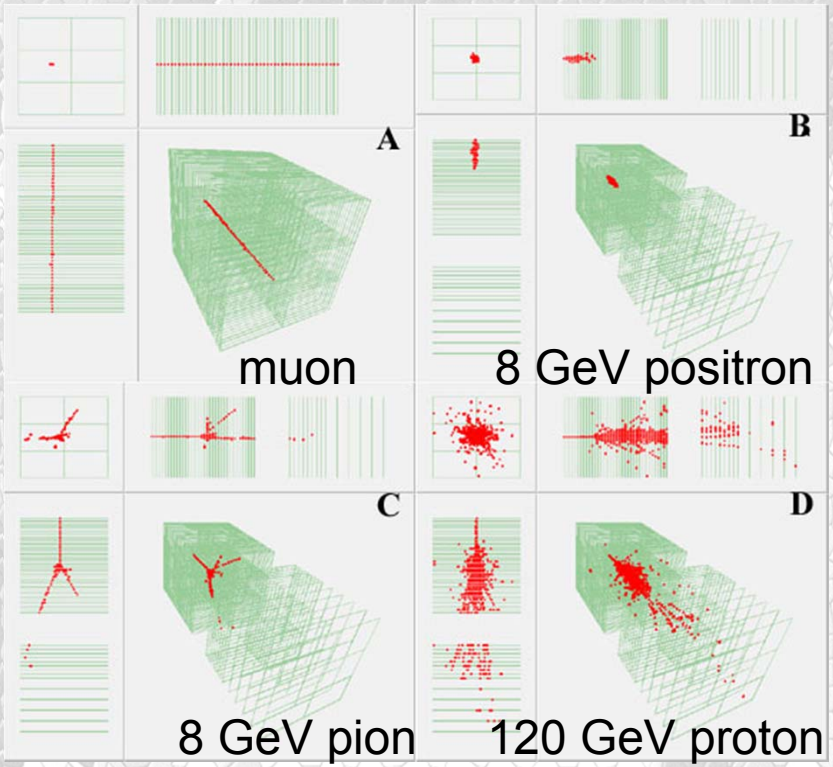

Digital HCAL: RPC

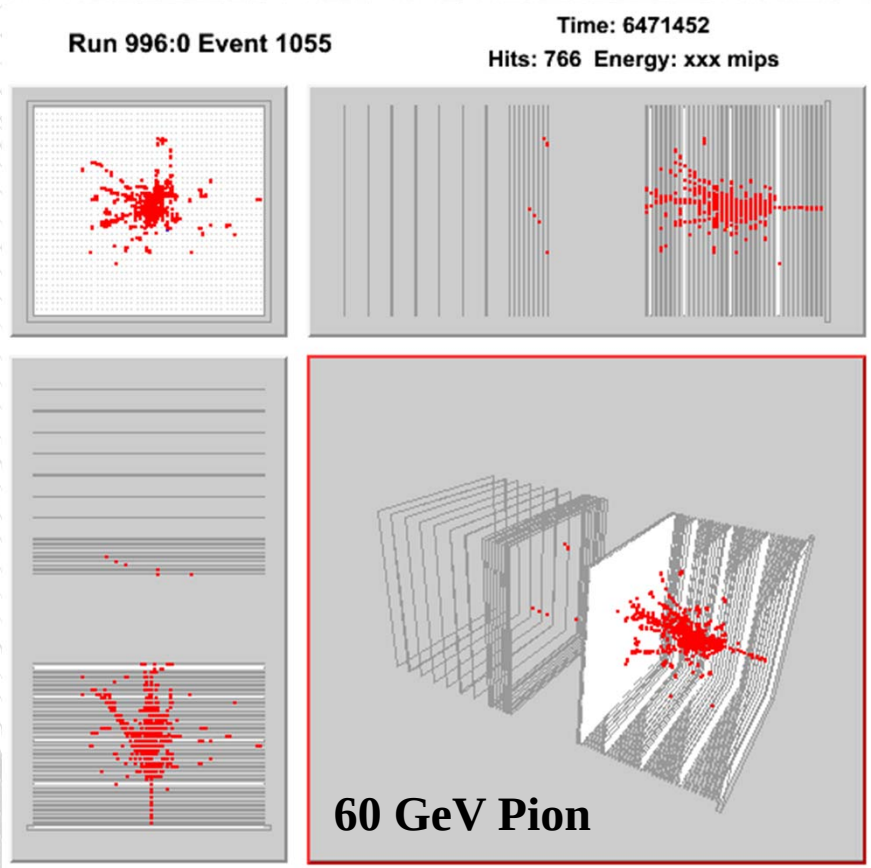

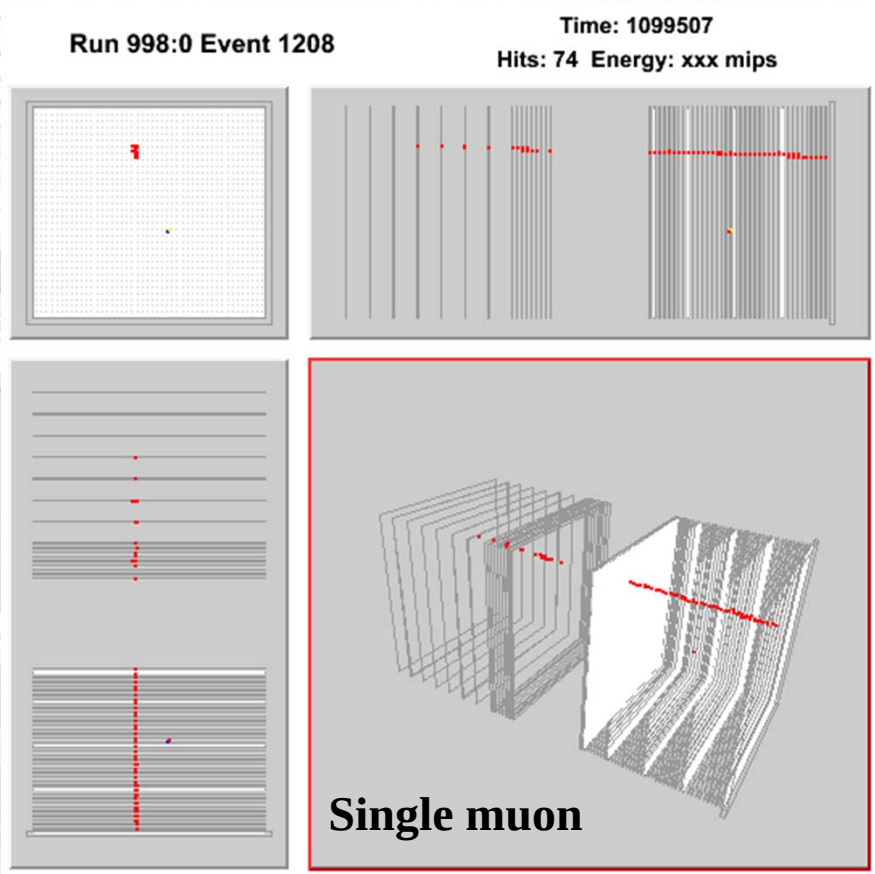

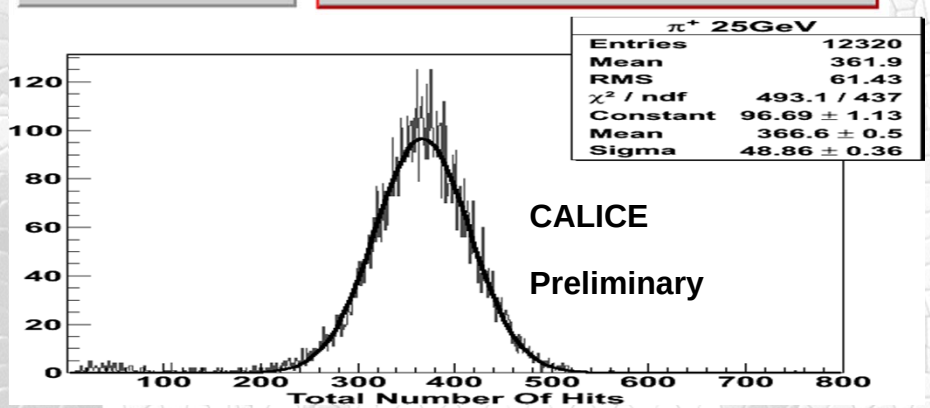

Hadron calorimeter with SiPMs

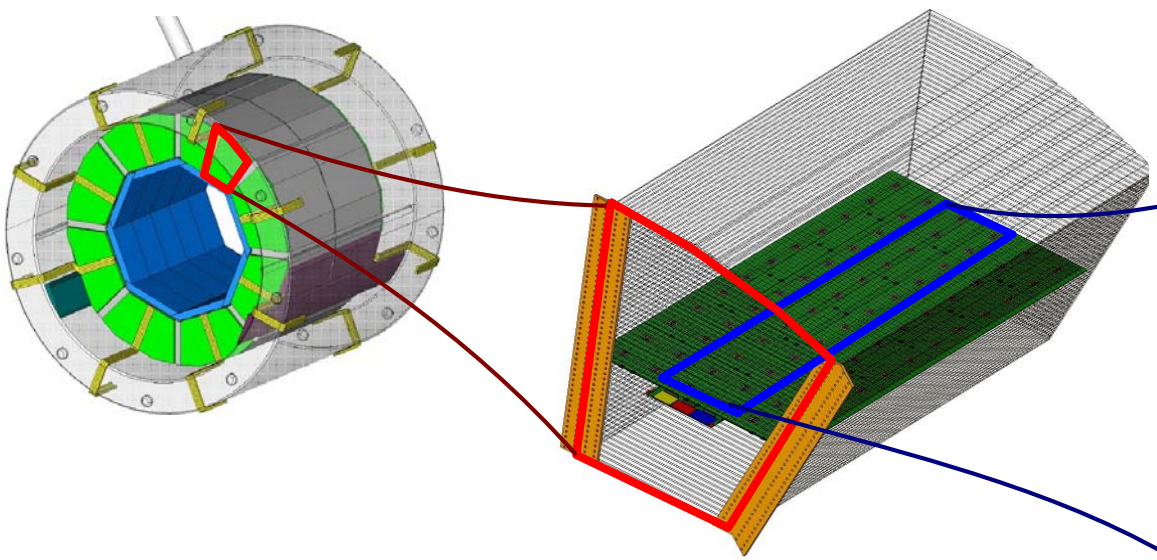

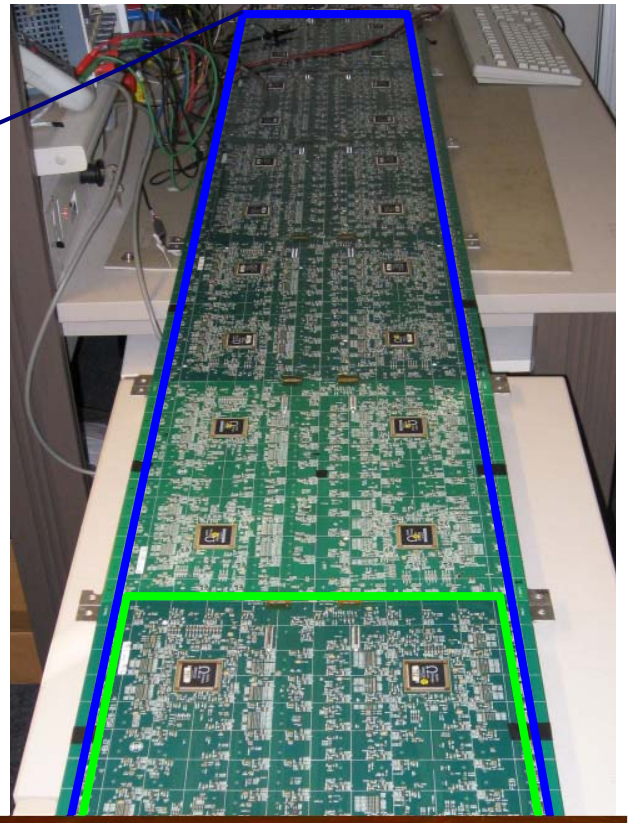

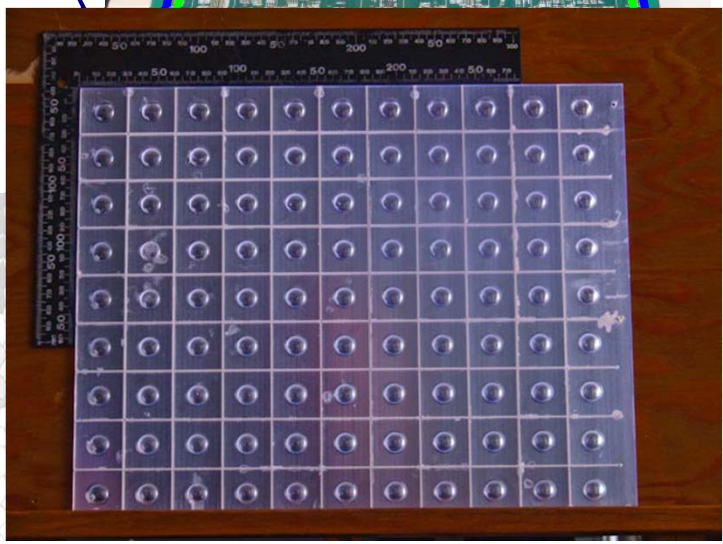

- With the advent of SiPMs, scintillator becomes an option for imaging calorimeter
  - Without compromising energy resolution
- Proof-of-principle with 7600 channel test beam prototype
  - Simulations validated
  - And it is a good calorimeter, too: 45%/√E (+) 1.8%
- Engineering challenge: electronics integration
  - ~ 5 M channels: not as demanding as ECAL, but still unprecedented

Muon System

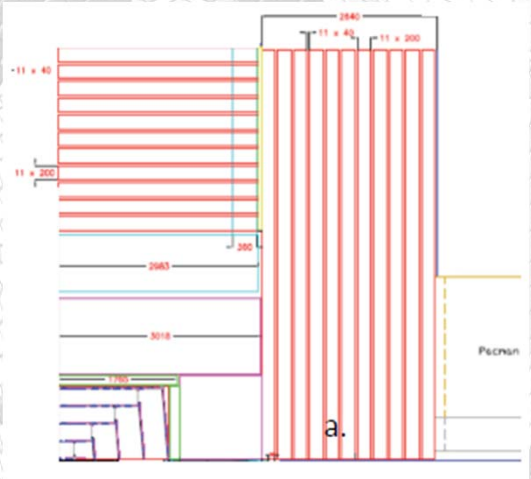

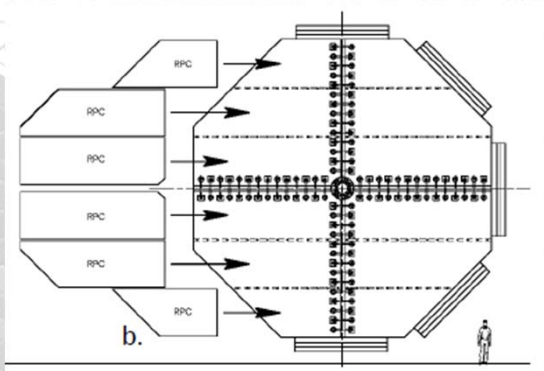

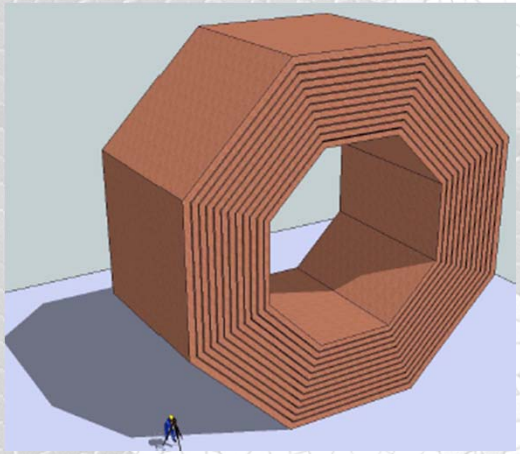

SiD Baseline – long scintillator strips
with WLS and SiPM readout

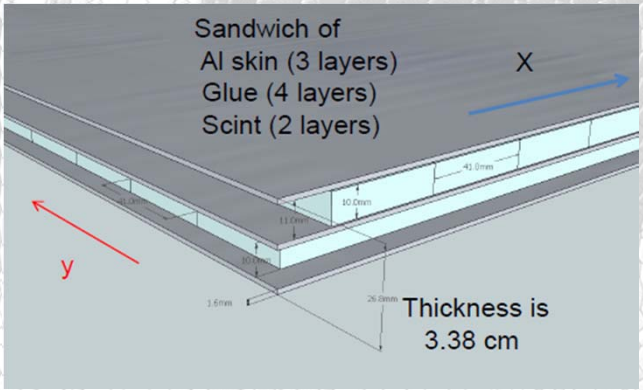

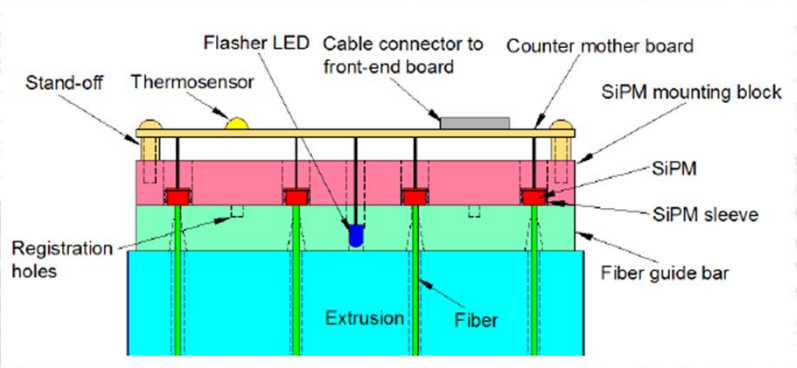

Muons

- Baseline:
  - Scintillator bars
  - SiPM readout
  - First engineering design of the muon layers
- RPC remains an option
  - Still actively being pursued

– ~4300 m^2

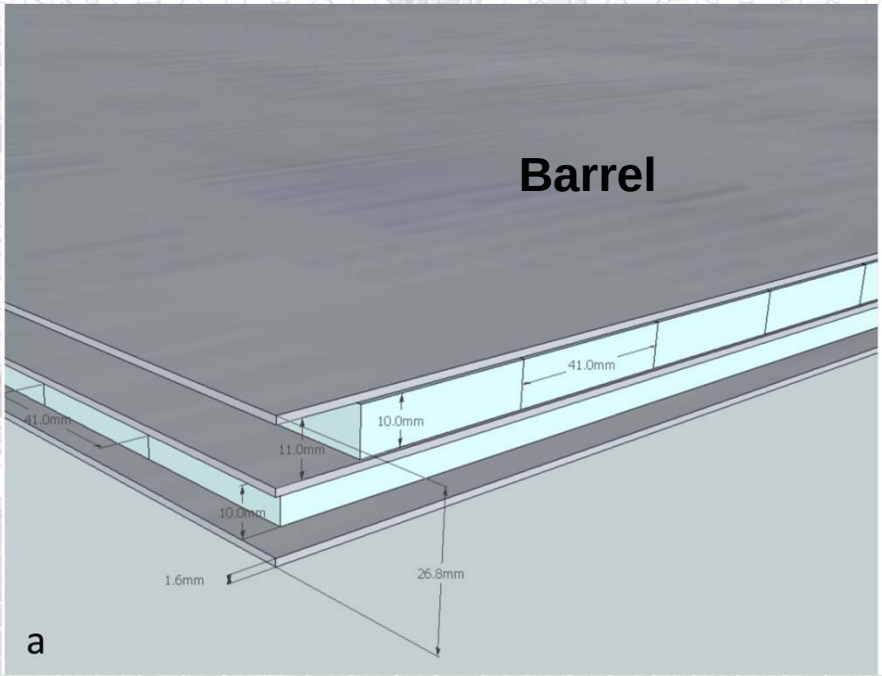

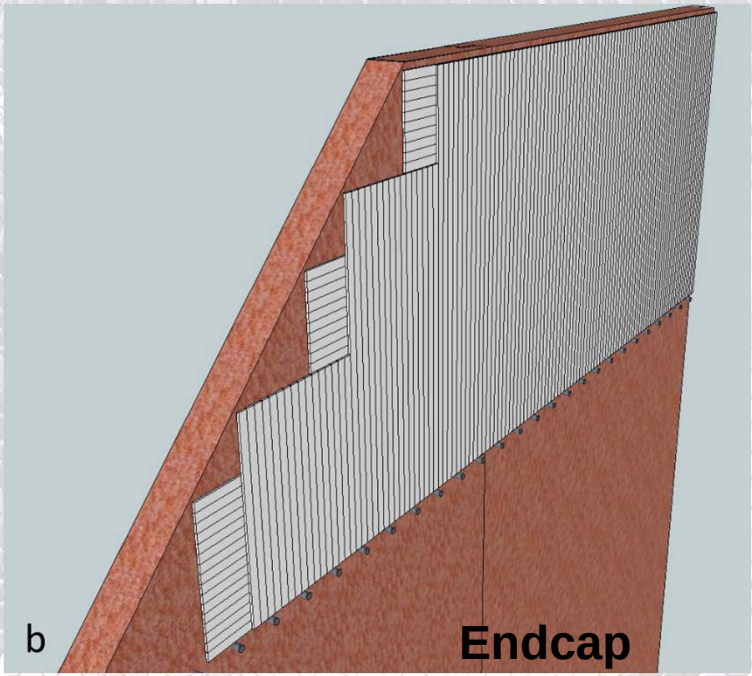

Forward Systems

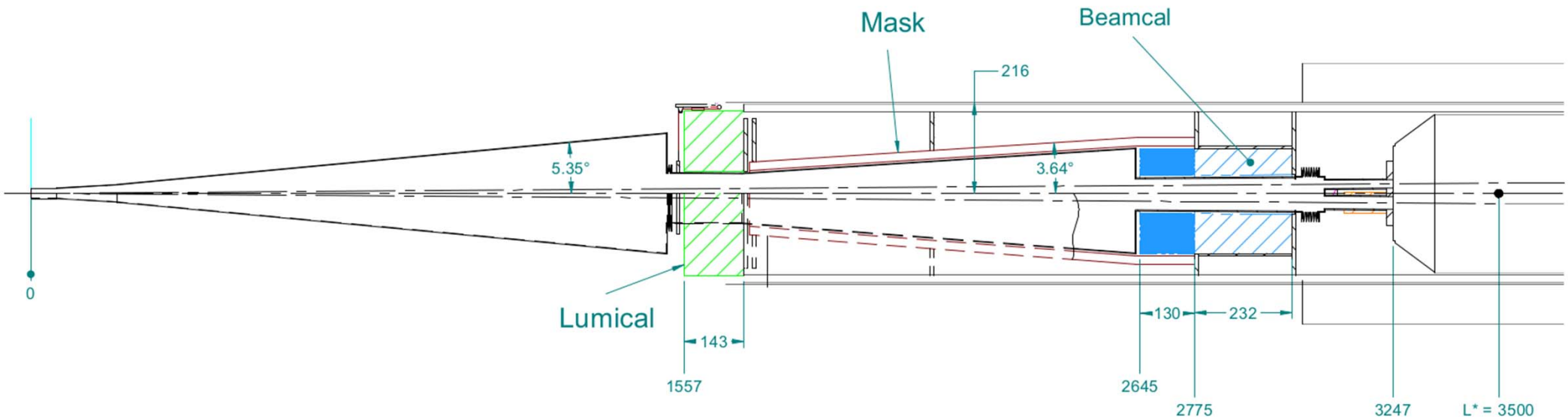

- SiD has two detectors in its forward region: Lumical & Beamcal
- Unlike the rest of the detector, doses in the innermost region of these calorimeters will exceed 100MRad/year.

Hadronic Processes in EM Showers

Energy deposition is primarily e+e- showers, damage may come significantly from hadrons. Test sensors near shower max in W with 3.5-10.6 GeV e- beam.

UCSC has tested p,n type: magnetic Czochralski; float zone Si
Alternative to GaAs or CVD diamond.

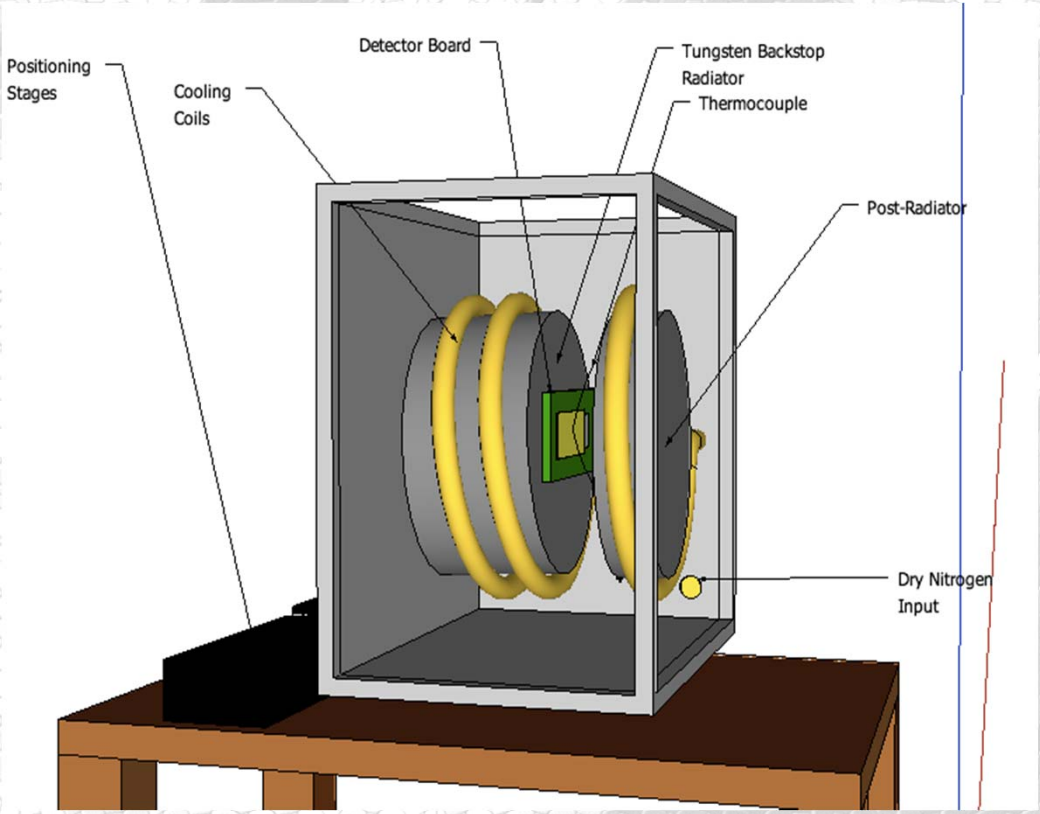

Up to 100W beam absorption; operate below freezing to avoid annealing

Results: NC sensors

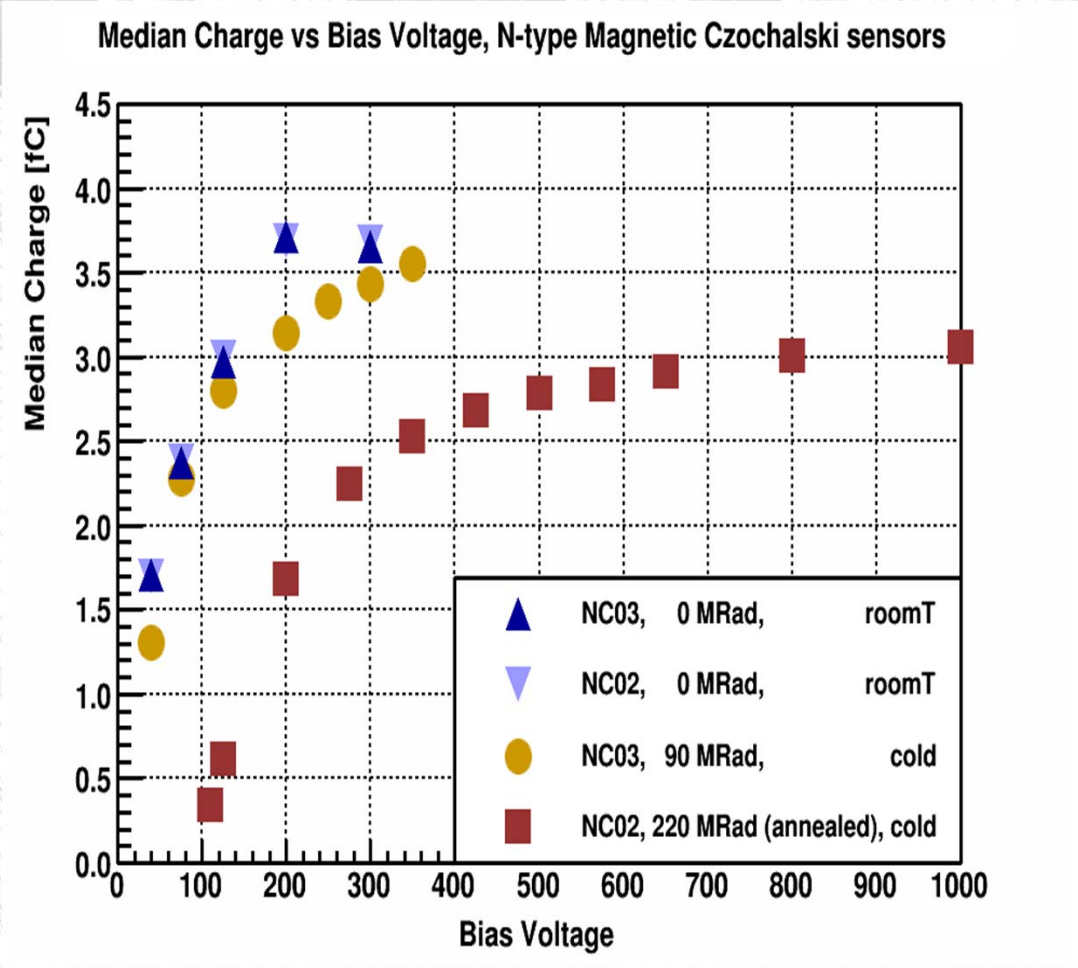

n-type Czochralski <20% reduction for > 220 Mrad
Others tolerant to 20 Mrad.

The Bean Chip for Forward Calorimetry

- Bean V1.0
  - Dedicated chip for the high-occupancy environment
- Specs
  - 32 channel
  - 2820 Buffers
  - 10 bit ADC/ channel
  - Fast analog adding
- Successful Test phase just finished

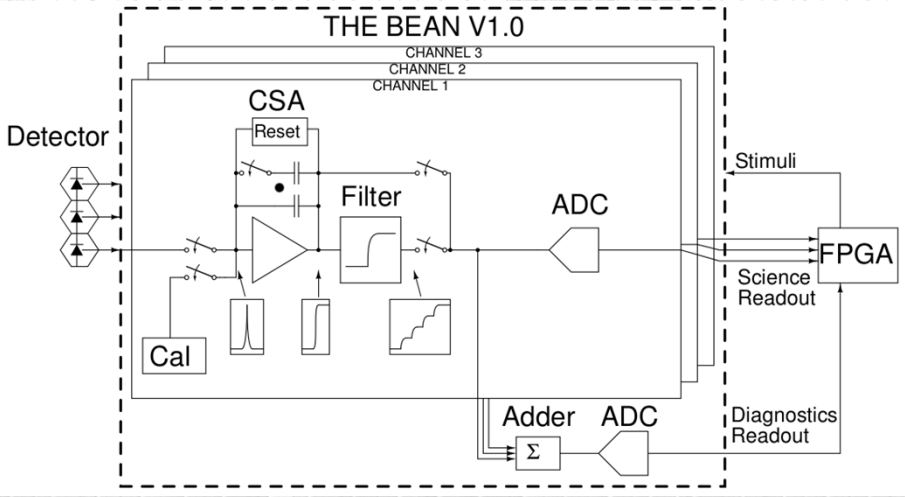

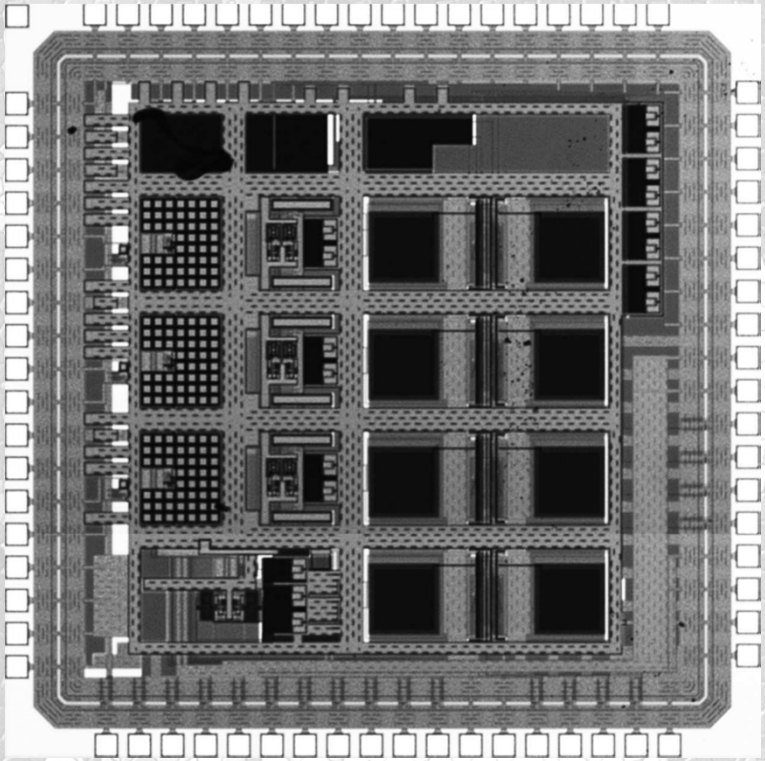

Large aperture 5T solenoid

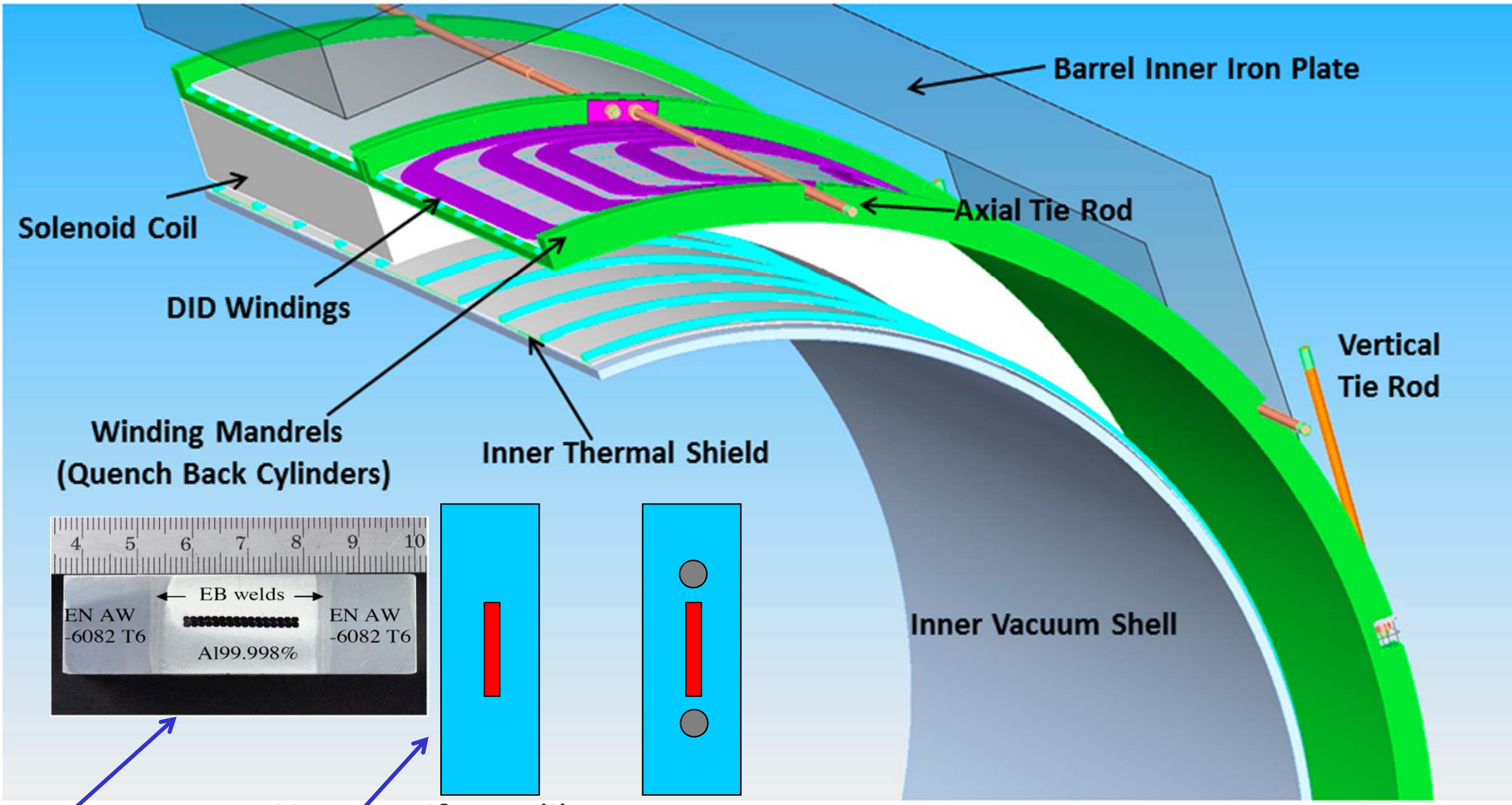

CMS Conductor

Use a uniform dilute aluminum alloy or a high purity aluminum matrix composite.

Add reinforcing Inconel cables to the stabilizer.

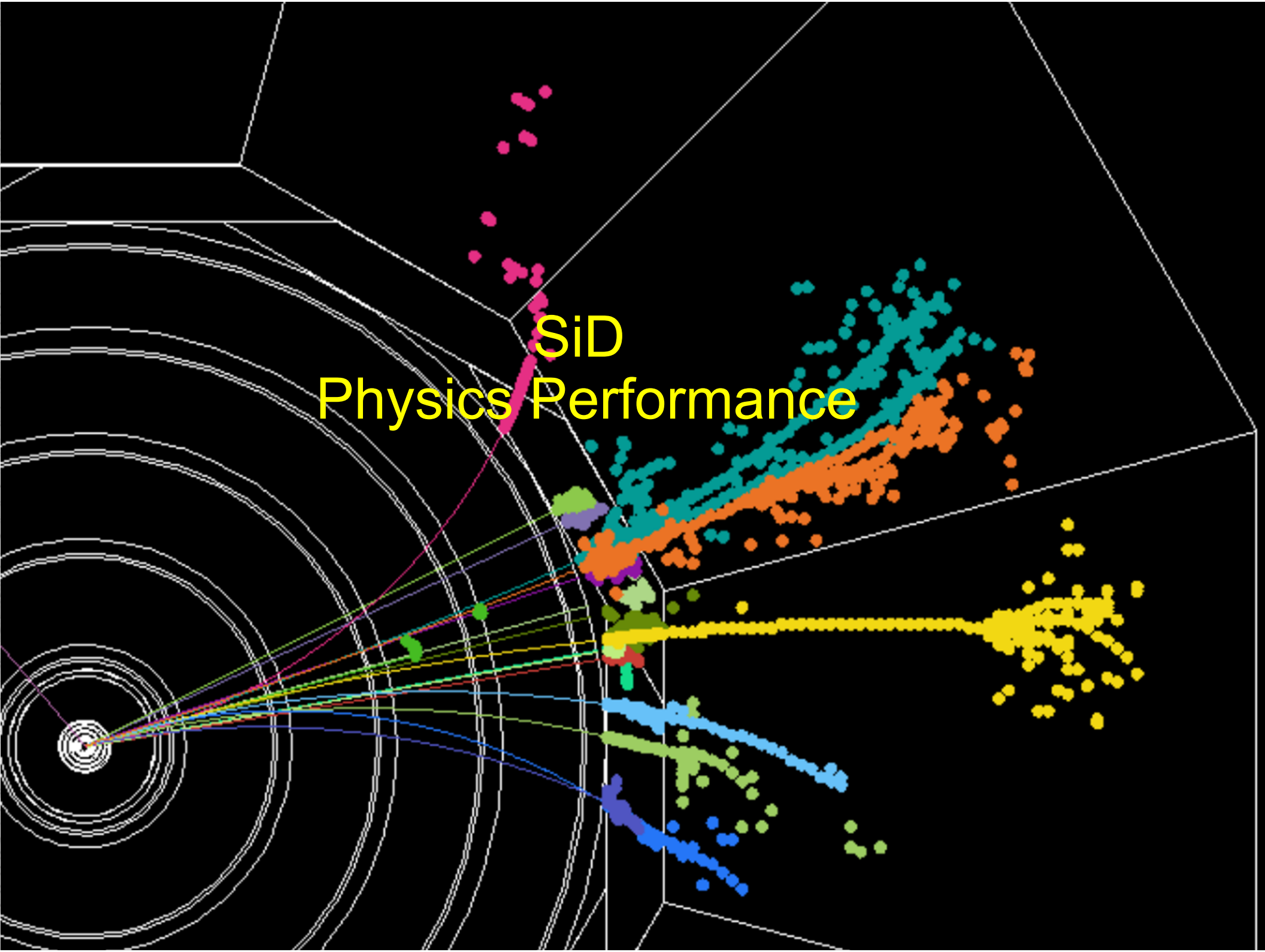
SiD
Physics Performance

Performance: PFA

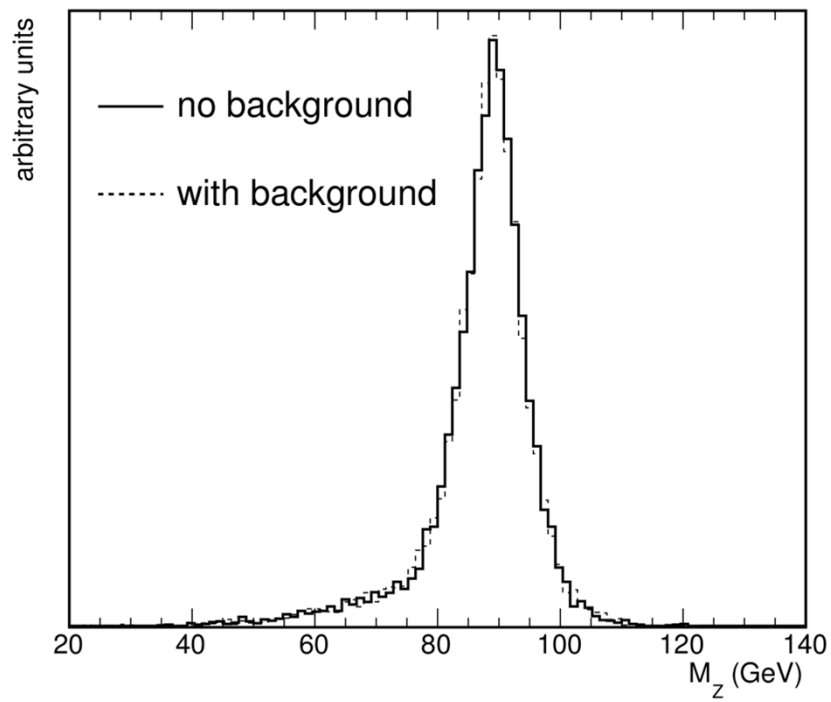

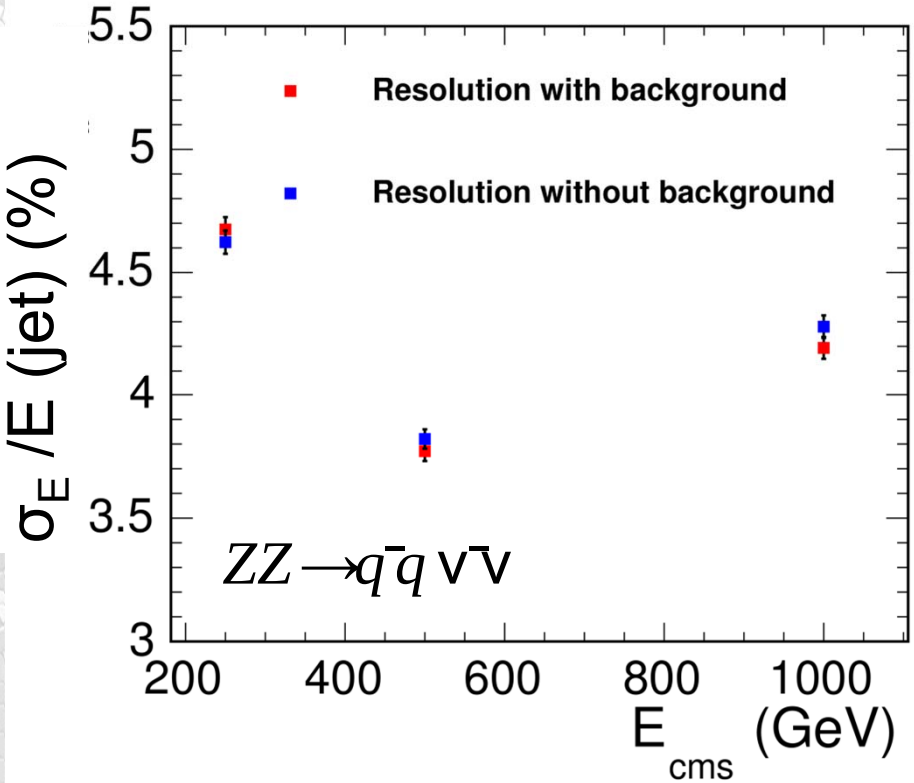

- SiD PFA performance is excellent
  - Fulfills ILC physics goals
- Robust against backgrounds
  - Driven by all-Silicon approach and single-bunch time-stamping

Summary

- ILC physics case is superb and compelling
- ILC machine has TDR. Site specific work needed.
- SiD
  - "Validated" concept, able to robustly address the physics
  - Anxious to start on TDR
- Japan
  - Developments there are very encouraging

More Slides

The Higgs discovery

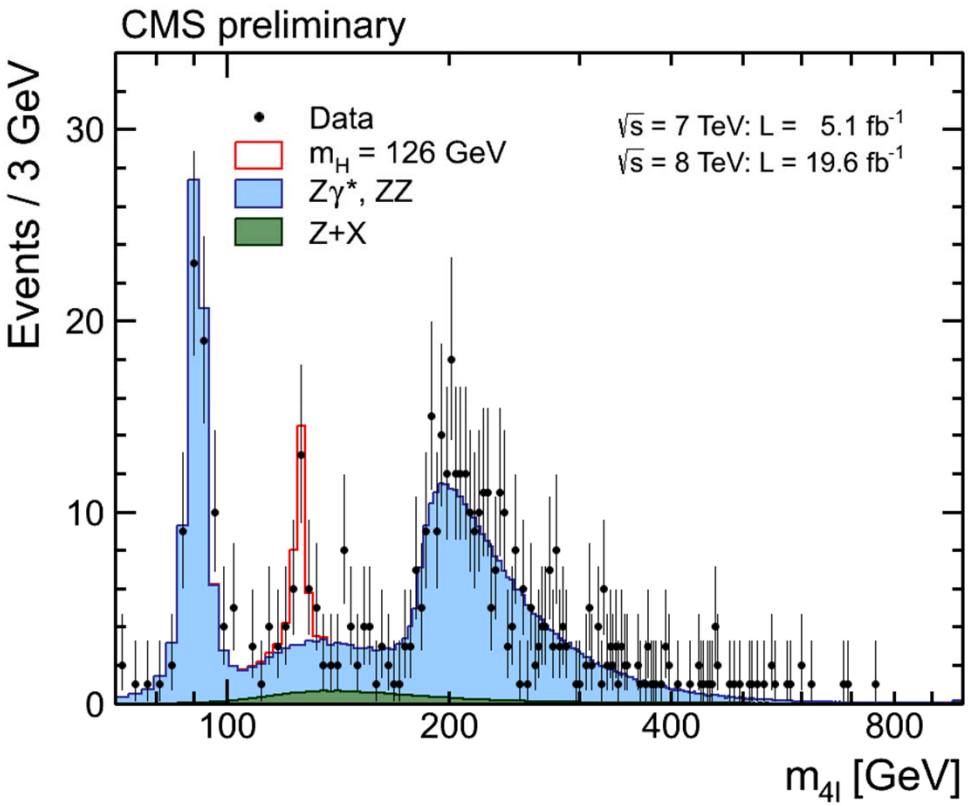

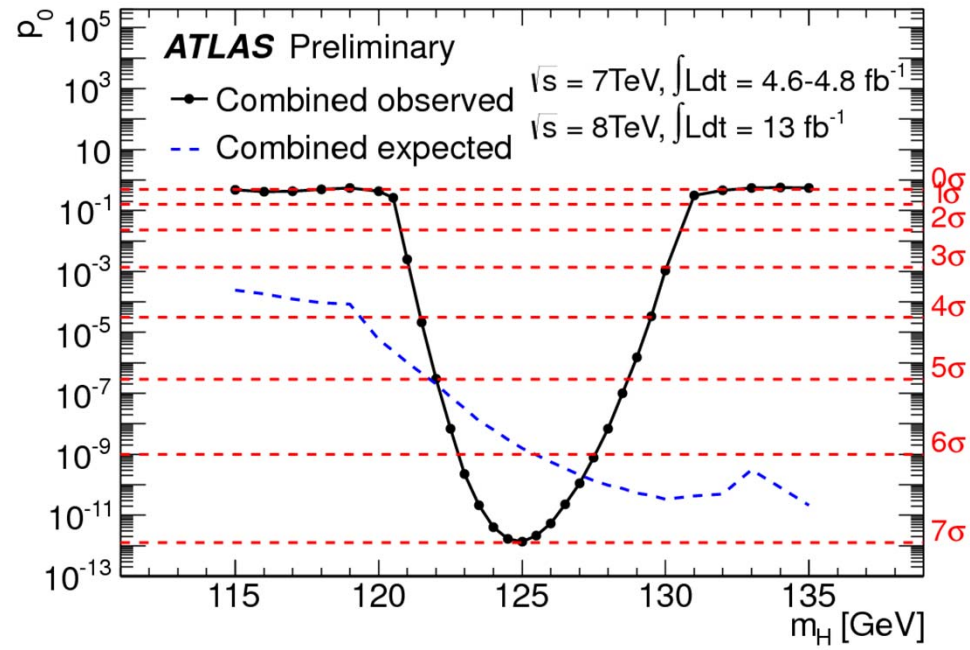

ATLAS and CMS have established the existence of a Higgs-like particle at ~ 125 GeV

However ...

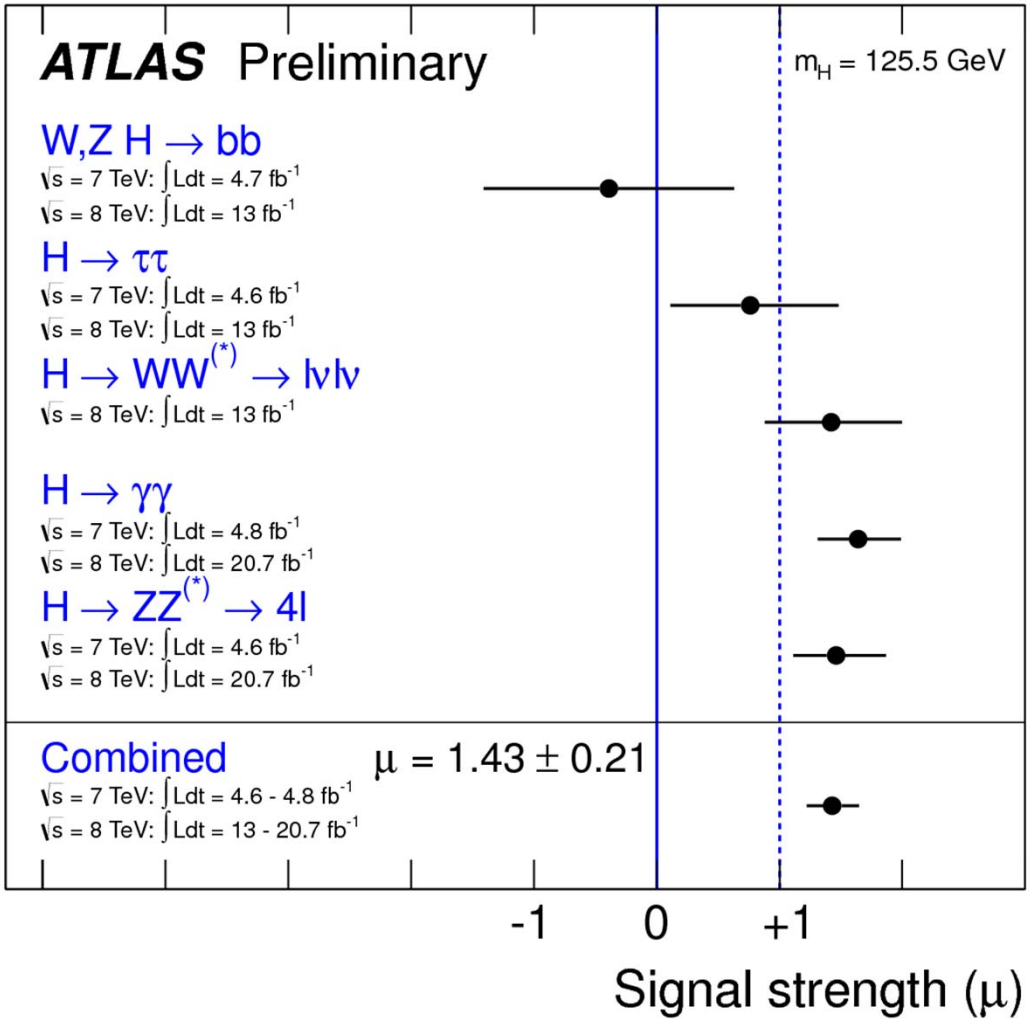

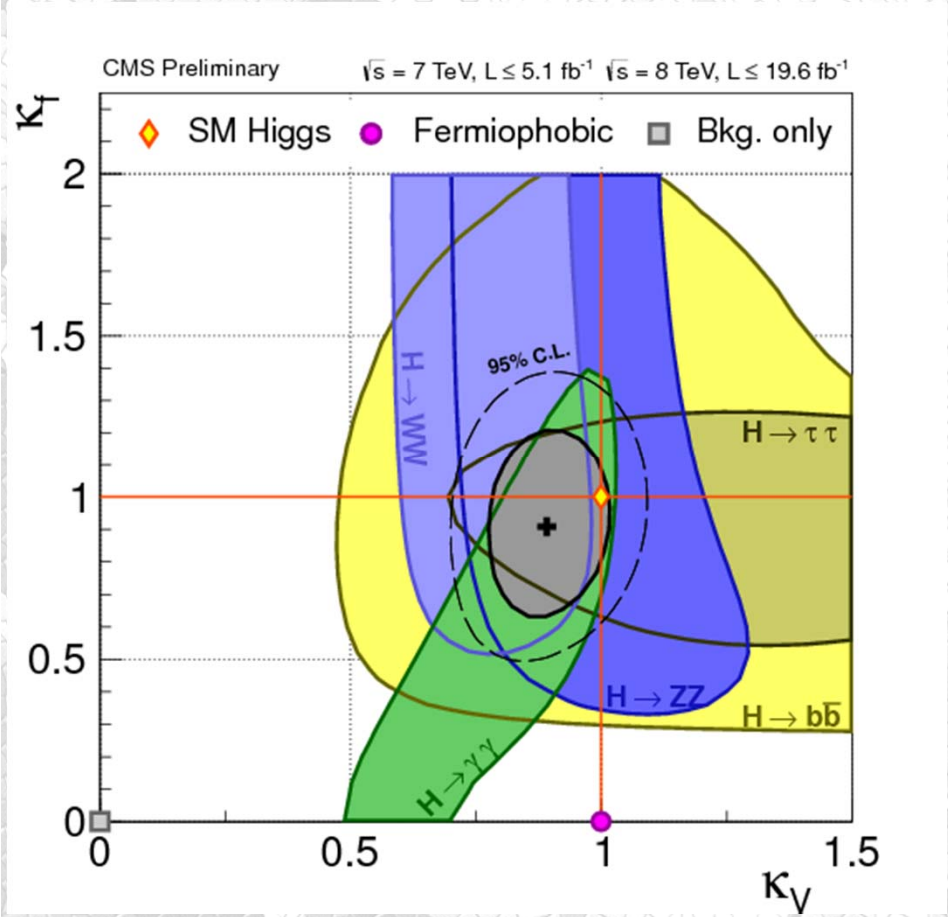

The effort of understanding this new particle have just started

Superconducting Cavities

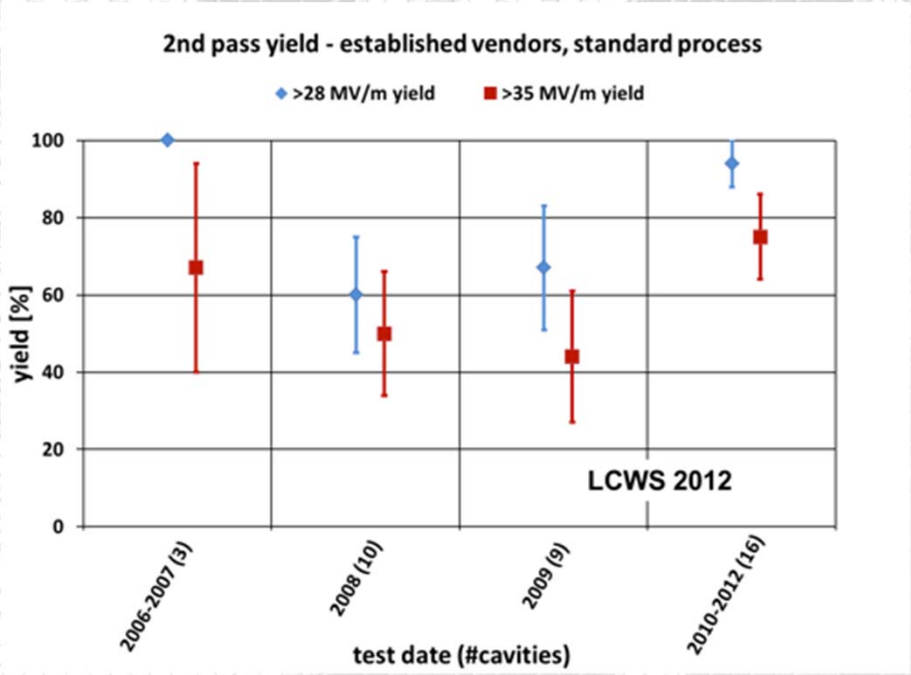

- Tesla-Style Niobium Cavities for the Main Linac
  - Required Gradient 31.5 MV/m
- Production yield:
  - 94 % at > 28 MV/m,
  - Average gradient: 37.1 MV/m
  - Record 46 MV/m

Simulating backgrounds

- Pair background
  - ~ 400k/ BX @ 1 TeV
  - Very forward
- $\gamma\gamma \rightarrow$ hadrons
  - 4.1 events per BX @ 1 TeV
  - 1.7 events per BX at 500 GeV
  - More central
- Overlays these over "physics events"

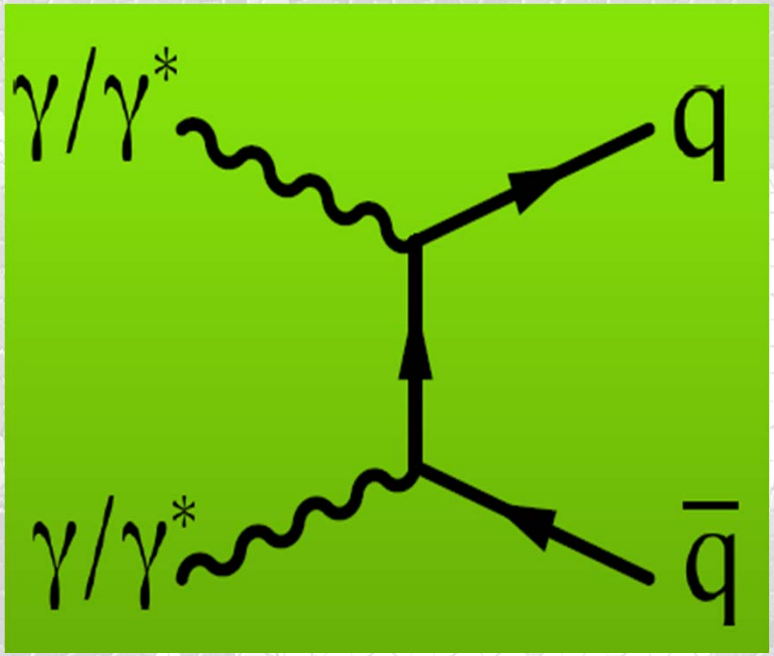

PFA in a nutshell

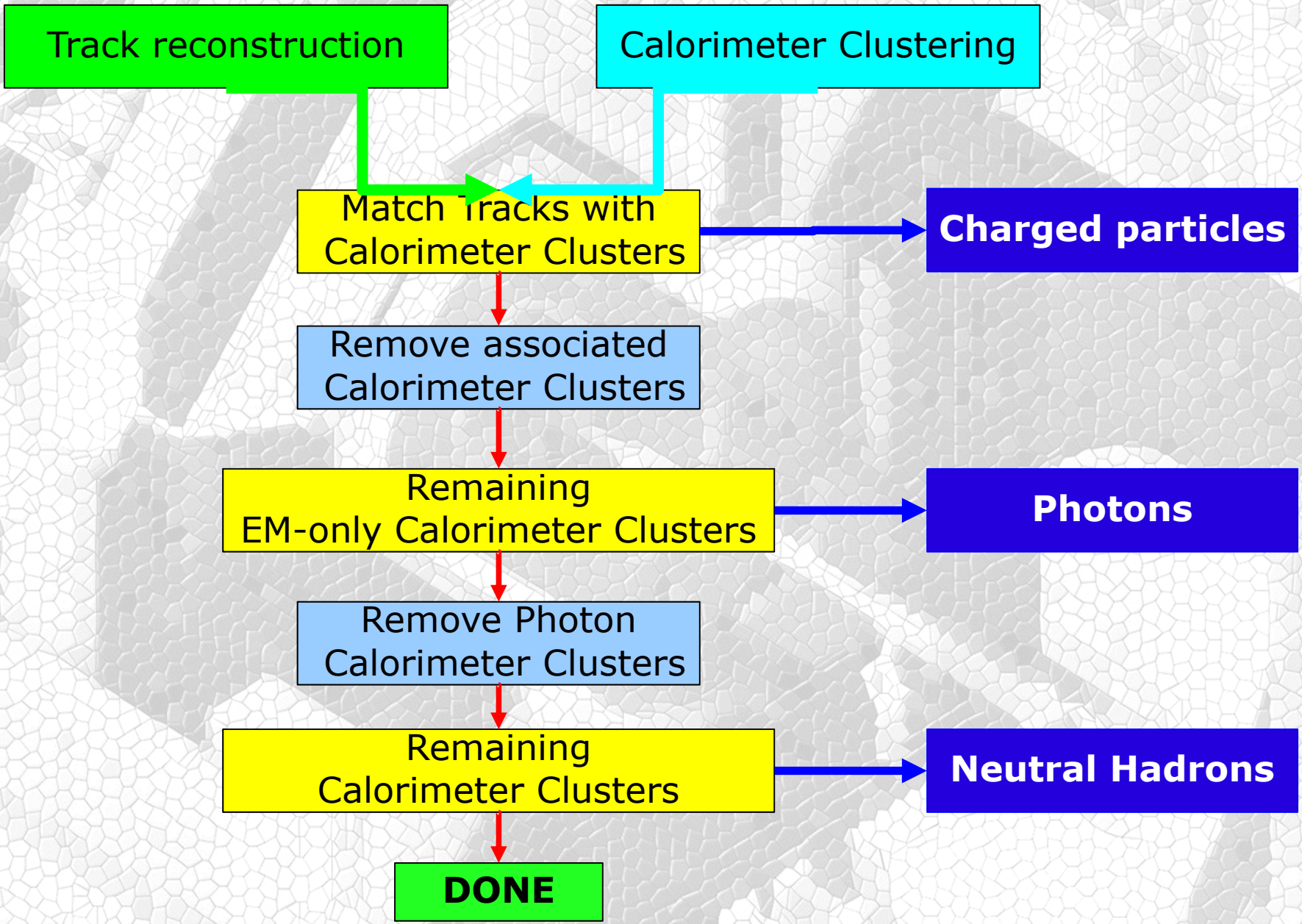

Simulation & Reconstruction

- Full Simulation& Reco
  - Including beam backgrounds
- Simulation
  - Detailed GEANT4 detector simulation
  - Including “dead areas”
- Reconstruction
  - Digitization, Tracking, Particle Flow, Flavor Tagging
  - No cheating at all

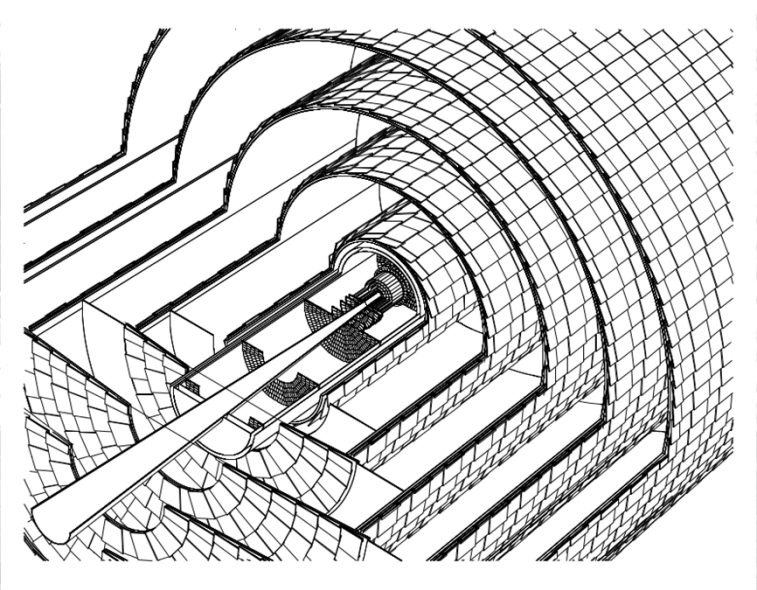

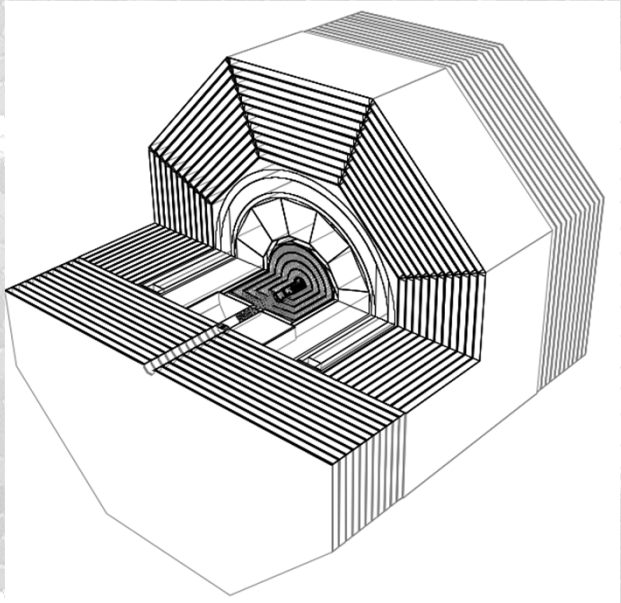

Jet Resolutions

Particle Class	SubDetector	Jet energy fraction	Particle Resolution	Jet Energy Resolution
Charged	Tracking	60%	$10^{-4}\ \sqrt{E_{charged}}$	neg.
Photons	ECAL	30%	$11\ \%\ \sqrt{E_{EM}}$	$6\ \%\ \sqrt{E_{jet}}$
Neutral Hadron	HCAL (+ECAL)	10%	$40\ \%\ \sqrt{E_{hadronic}}$	$13\ \%\ \sqrt{E_{jet}}$

- Energy resolution about 14% (driven by HCAL)
- Confusion terms have bigger impact
  - $\sigma_{jet}^2 = \sigma_{charged}^2 + \sigma_{EM}^2 + \sigma_{hadronic}^2 + \sigma_{confusion}^2 + \sigma_{threshold}^2$
- Performance not limited by Calorimetry
  - Need high granularity calorimetry to reduce confusion !
- Current best PFA ~25 % /√E for 100 GeV Jets